PARTS BOOK

Deere Hinged Draper Headers

(HD**F / HD**R)

Version 20220331

Parts Order Information

Contact Info:

TEMP Farm Equipment Ltd.

3890 Wellington St. Box 269

Mitchell, Ontario, Canada

N0K-1N0

Ph: 1-877-348-0066 or 519-348-0066

Fax: 519-348-0061

Parts: Craig Rock craigrock@awsairbar.com

Service: Dave Miller dmiller@awsairbar.com

Sales: Zac Corbin zcorbin@awsairbar.com

Sales: Carmen Drost cdrost@awsairbar.com

Accounting: Melanie Thompson admin@awsairbar.com

Parts Order Information:

To best fulfill your parts requirements, Gather the following information before contacting us:

- Header Make / Model
- Combine Make / Model
- AWS Fan SN (location shown in picture)

If you have any questions regarding the suitability of the parts you receive, please call the above number ASAP so that we can assist in ensuring the parts are correct and used properly.

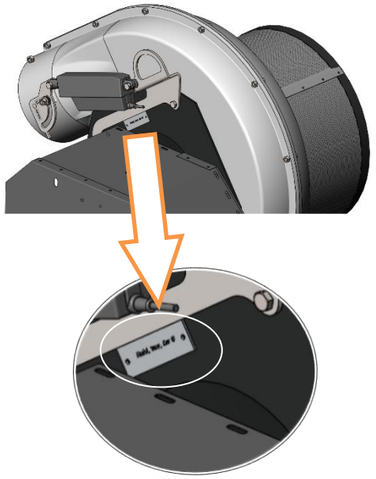

Fan Serial Number Location

The serial number plate for the fan is located on the fan mounting plate, below the throttle actuator mounting bracket.

Terms and Conditions:

1. All goods are F.O.B Mitchell, Ontario, Canada or Minot, ND USA
2. All Parts include 30 day warranty of defects.
3. Please indicate preferred shipment method with order (due to our shipping volume it is typically most cost effective to have parts shipped out prepaid, with shipping costs shown on the parts invoice).
4. Returns accepted within 12 months of purchase, must be unused and are subject to a 10% handling fee. They must be shipped back to AWS prepaid with prior authorization.

Table of Contents

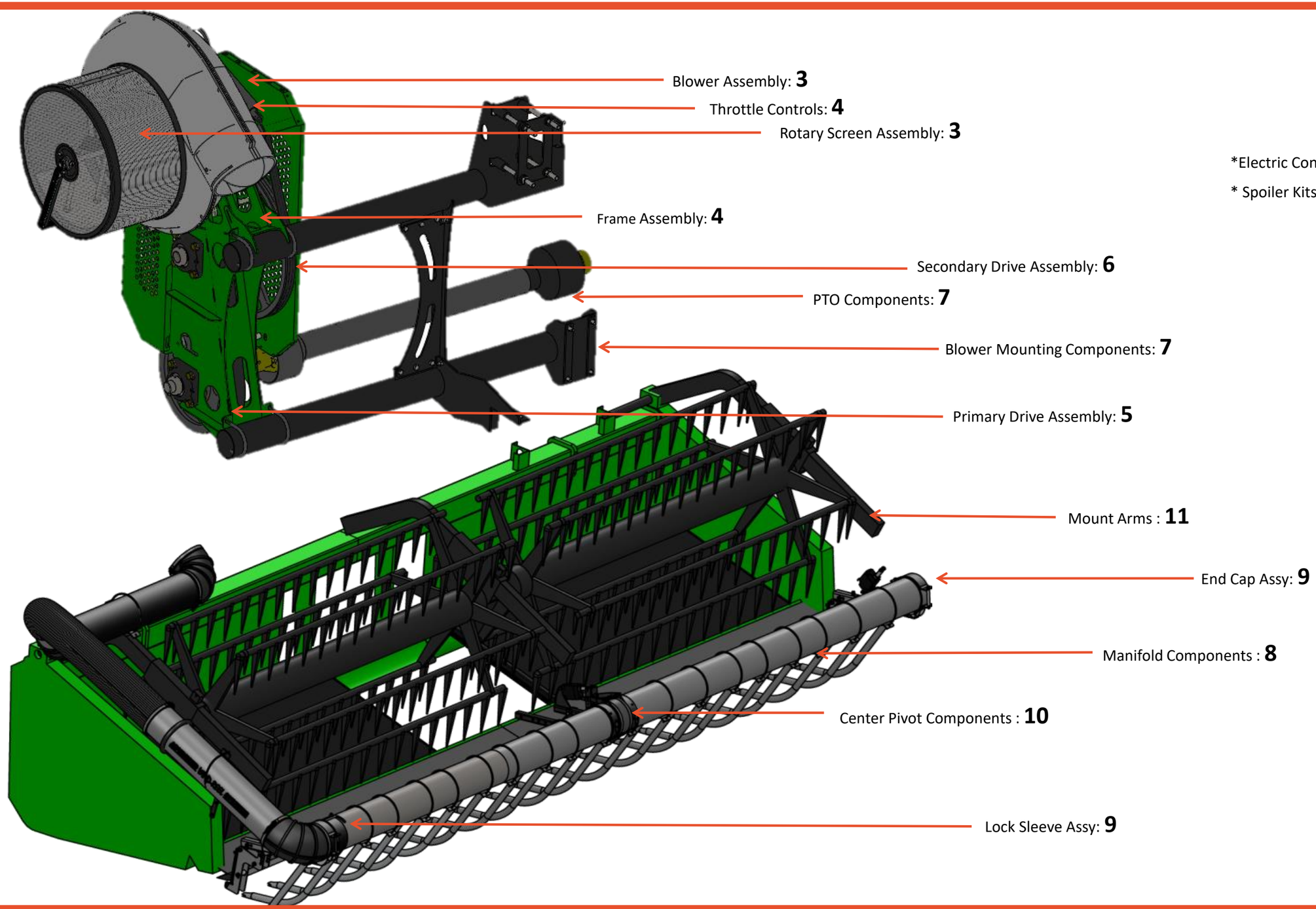

*Electric Controls: **12**

* Spoiler Kits: **13**

Rotary Screen Assembly

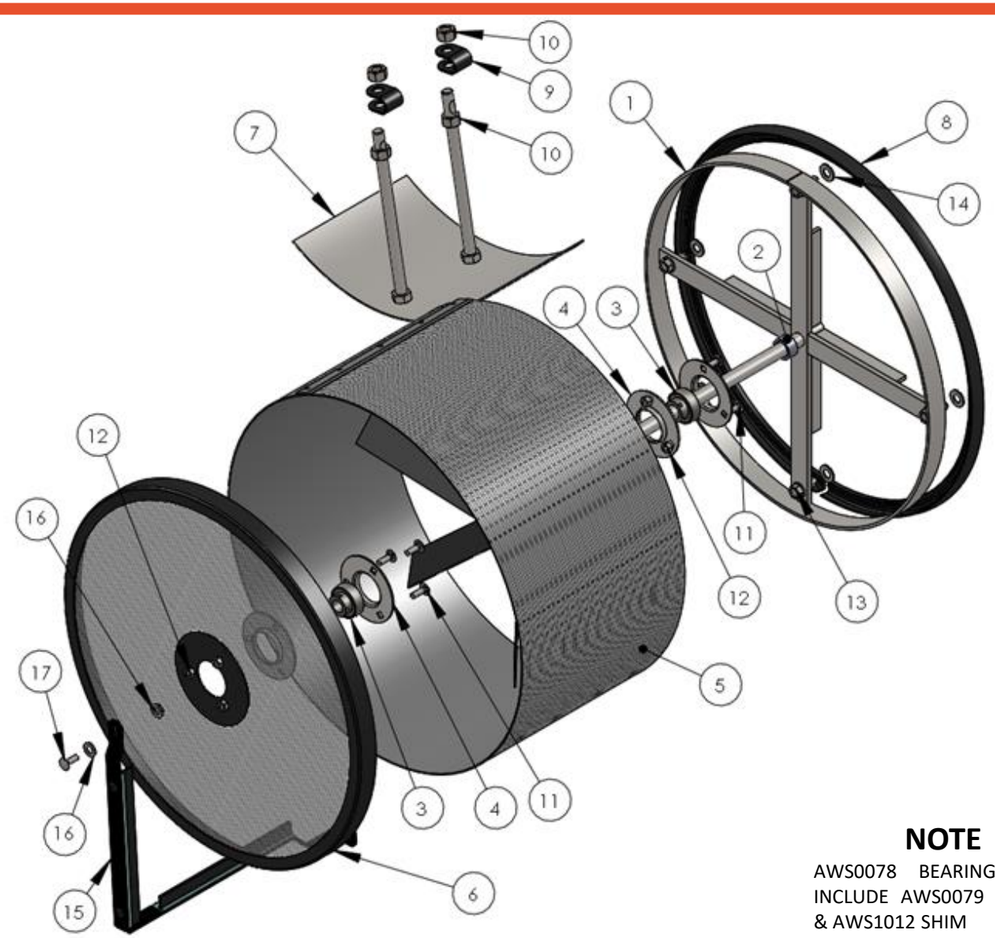

NOTE

AWS0078 BEARINGS NOW INCLUDE AWS0079 FLANGES & AWS1012 SHIM

Ref.	Part Number	Description	Qty.
1	AWS0076	Rotary Screen Support	1
2	AWS0228	Rotary Screen Spacer, 3/4 x 1/2	1
3	AWS0078	Bearing, Rotary Screen, AS202-101 (Includes 2x AWS0079 Flange &AWS1012 Shim)	2
4	AWS0079 AWS1012	Bearing Flange, PF203 Shim, PF203	4 1
5	AWS0077R	Rotary Screen, Right	1
6	AWS0080	Rotary Screen Cap	1
7	AWS0081	Clean Out Plate	1
8	AWS0088	Rotary Screen Seal	Opt

Ref.	Part Number	Description	Qty.
9	AWS0082	Clevis	2
10		1/2 nc Lock Nut	4
11		Bolt, 1/4nc x 3/4 Carriage	6
12		Nut, 1/4 nc Nylock	6
13		Bolt 3/8 nc x 1 Self Tapping	4
14		Washer, 3/8 Flat	4
15	AWS0083	Rotary Screen Brush Assy	1
16		Washer, 5/16 Flat	AR
17		1/4nc x3/4 Button Head Cap, SS	1
	AWS0230	Rotary Screen Assembly (Incl 1-14)	

Blower Assembly

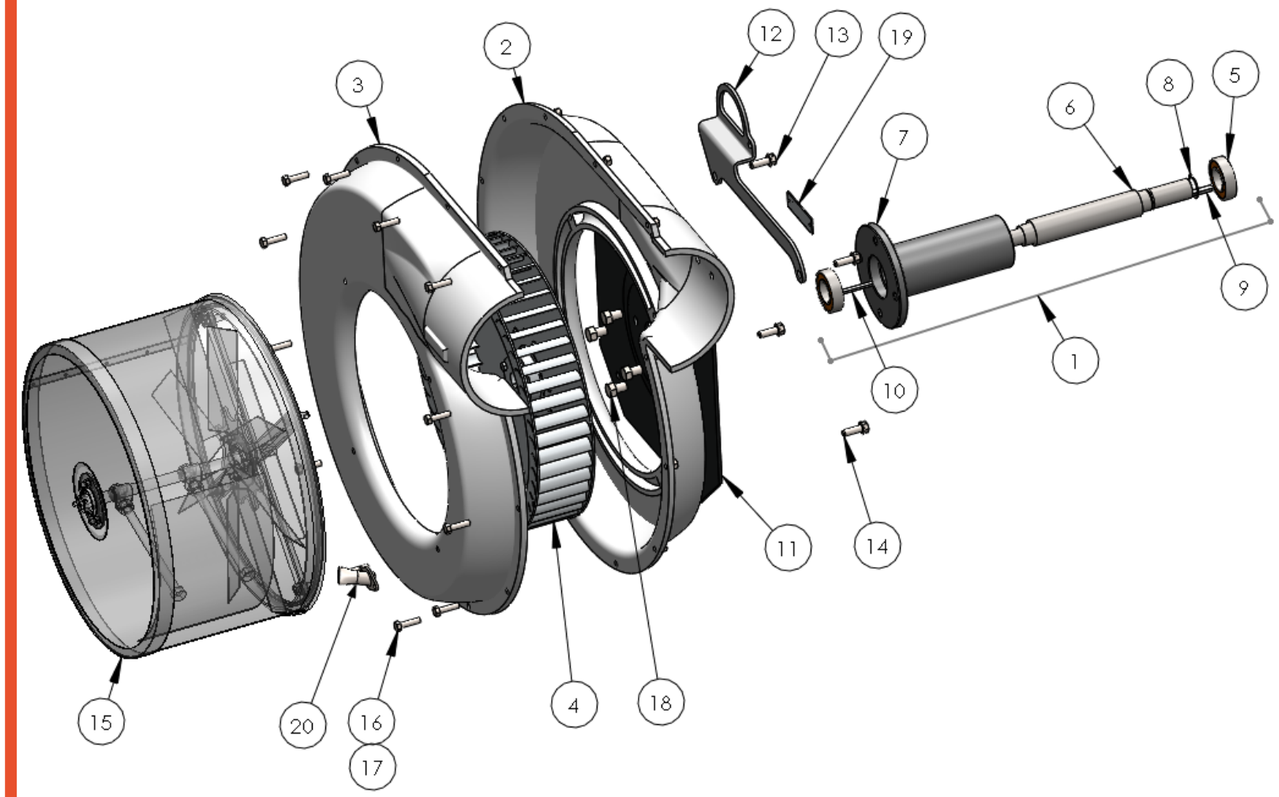

Ref.	Part Number	Description	Qty.
1	AWS0127	Fan Shaft Assembly (Incl. 5-8)	1
2	AWS0068	Fan Housing, LH	1
3	AWS0069	Fan Housing, RH	1
4	AWS0071 AWS0070	Impeller, Right Hand H7/8 Hub (Included with Impeller)	1 1
5	AWS0037	Bearing, Fan Shaft 6206-2RSC3	2
6	AWS0035	Fan Shaft, 14”	1
7	AWS0038	Fan Shaft Housing, 7.5”	1
8	AWS0036	Snap Ring, 1-1/8 EXT.	1
9	AWS0034	Key, 1/4X2	1
10	AWS0073	Key, 3/16X1-1/2	1

Ref.	Part Number	Description	Qty.
11	AWS0067	Fan Plate	1
12	AWS0203	Actuator Mount, See next page	1
13		Bolt, 3/8nc x 1-1/4	2
14		Bolt, 3/8nc x 1 Self Tapping Flange	2
15	AWS0230R	Rotary Screen Assembly	1
16		Bolt, 5/16nc x 1-1/4	12
17		Nut, 5/16nc Nylock	12
18		Bolt, ½” nc x ¾”	4
19	AWS0065	Serial Number Plate	1
20	AWS1038R	Rotary Screen Nozzle	1

Throttle Controls

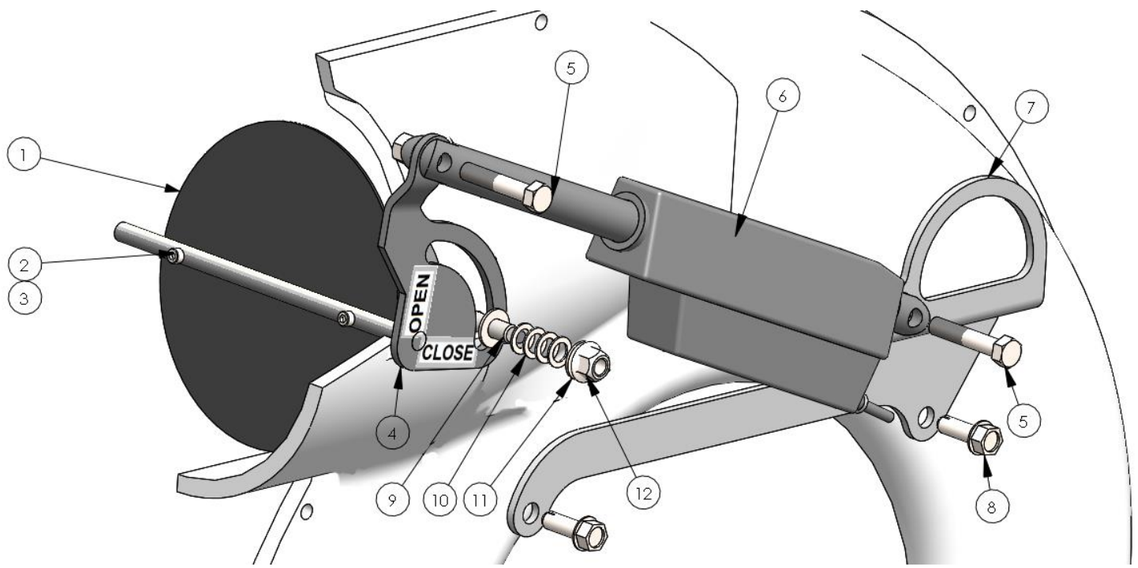

Item #	Part #	Description	Qty.
1	AWS0114	Throttle Plate	1
2	AWS0231	Bolt, 10-32 Socket Head Cap	2
3	AWS0232	Nut, 10-32 SS Nyloc	2
4	AWS0212	Throttle Shaft, RH Electric	1
5	AWS0514	Bolt, Actuator	2
6	AWS0095	Actuator, Throttle Control	1
7	AWS0203	Actuator Mount, RH	1
8		Bolt, 3/8ncX1-1/4	1
9	AWS0171	Stud, M10-1.50	1
10	AWS0170	Spring Washer	4
11		Washer, 3/8 Flat	3
12	AWS0172	Nut, M10-1.50Flange Nyloc	1

NOTES:
1. See Electrical Controls section near back of manual for additional information.

Frame Assembly

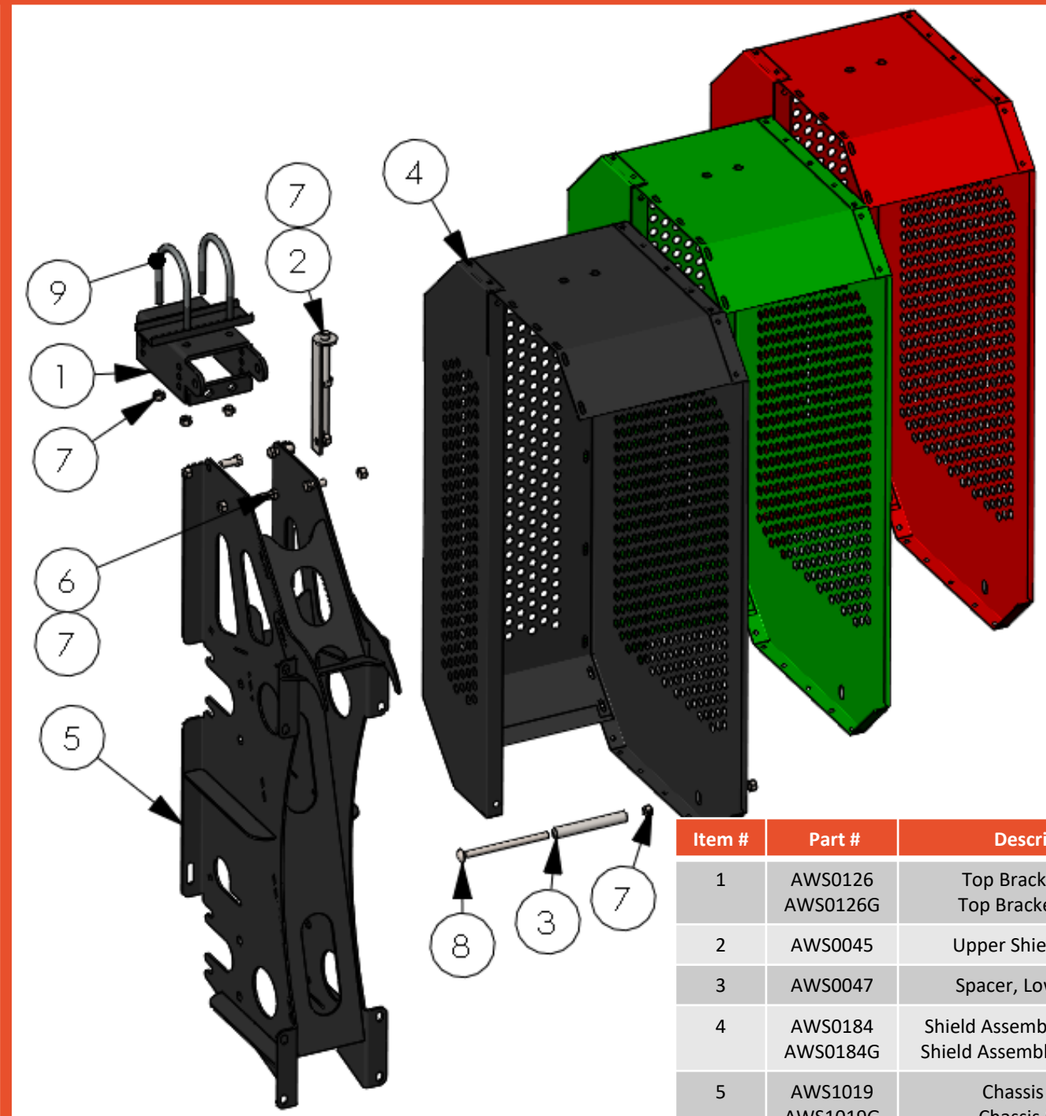

Item #	Part #	Description	Qty.
1	AWS0126 AWS0126G	Top Bracket (Black) Top Bracket (Green)	1
2	AWS0045	Upper Shield Support	1
3	AWS0047	Spacer, Lower Shield	1
4	AWS0184 AWS0184G	Shield Assembly , RH (Black) Shield Assembly , RH (Green)	1
5	AWS1019 AWS1019G	Chassis (Black) Chassis (Green)	1
6		Bolt, 3/8nc x 1	4
7		Nut, 3/8nc Serrated Flange	11
8		Bolt, 3/8nc x 5-1/2	1
9	AWS0039	U-Bolt, 3/8nc x 3	2
10		½ Flat Washer	1

Primary Drive Assembly

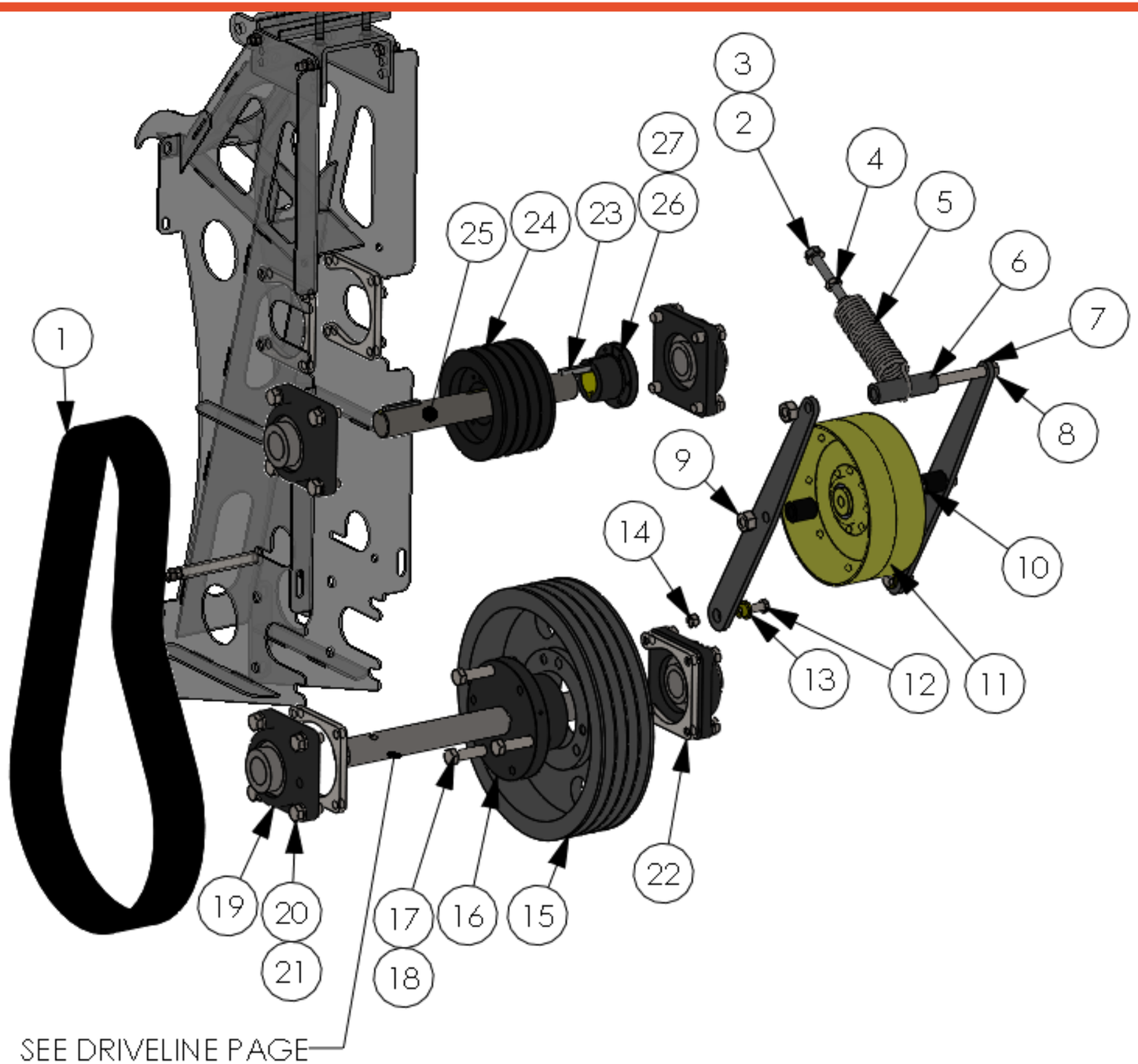

Item #	Part #	Description	Qty.
1	AWS0020 AWS0220	Belt, 5VX-630-4 Belt, 5V-630-4BP Premium	1 Opt
2	AWS0015	Tap Bolt, 7/16nc X	1
3		Flat Washer, 7/16	1
4	AWS0016	Jam Nut, 7/16nc	1
5	AWS0014	Spring, Extension (Incl Items 2-4)	1
6	AWS0017	Spacer, 1/2X 3-1/2	1
7	AWS0013	Idler Arm, Primary	2
8		Bolt, 1/2ncX5	2
9		Nut, 1/2nc Stover Lock	2
10	AWS0018	Spacer, 1/2 X1-3/16	2
11	AWS0012	Idler, HM Primary	1
12		Bolt, 3/8nc X 1-1/4	2
13	AWS0512	Bushing, Bronze	2
14		Nut, 3/8nc Stover Lock	2
15	AWS0211	Sheave, 5V12.5-4	1
16	AWS0008	Bushing E 1-3/8	1
17		Lock Washer, ½ (w/16)	3
18		Tap Bolt, 1/2nc X 2-1/2 (w/16)	3
19	AWS1032	Bearing Unit – F207 1-3/8	4
20		Bolt, 1/2nc X 1-1/4	16
21		Lock Washer, 1/2	16
22	AWS1020	Nut Plate, 1/2nc	4
23	AWS0011	Key, 5/16 x 2	3
24	AWS0024	Sheave, 5V-5.50-4	1
25	AWS0021	Shaft, Secondary HM	1
26	AWS0022	Bushing, SD 1-3/8	1
27		Tap Bolt, 1/4nc X 2 (w/26)	3

Secondary Drive Assembly

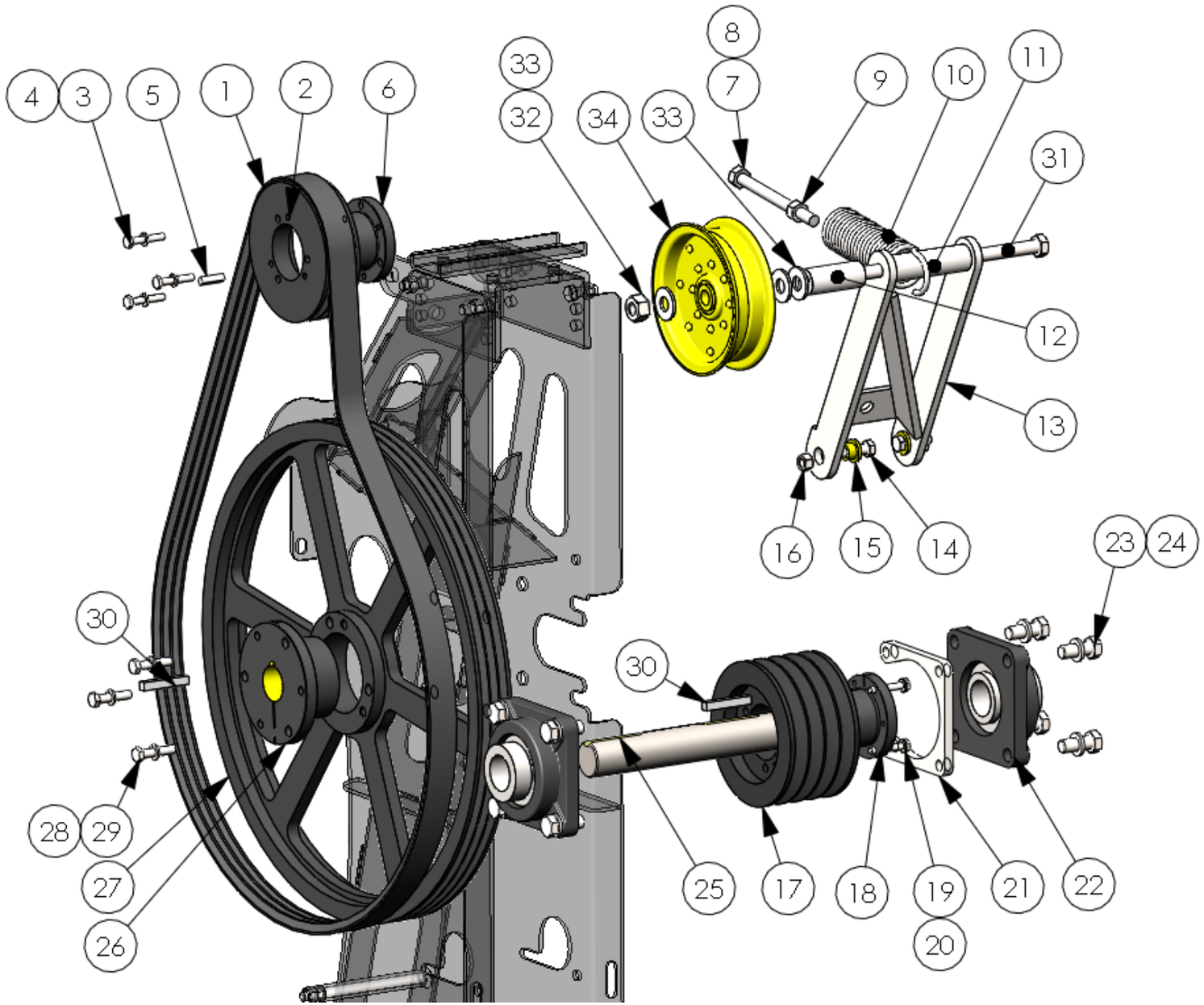

Item #	Part #	Description	Qty.
1	AWS0025	Belt, 3VX-750-3	1
2	AWS0029	Sheave, 3V-5.30-3	1
3		TapBolt, 1/4nc X 1-1/2 (w/6)	3
4		Lock Washer ¼ (w/6)	3
5	AWS0034	Key, 1/4X1-1/4	1
6	AWS0033	Bushing SDS 1-1/8	1
7	AWS0015	Tap Bolt, 7/16nc X 5	1
8		Flat Washer, 7/16	1
9	AWS0016	Jam Nut, 7/16	1
10	AWS0014	Spring, Extension (Incl. Items 7-9)	1
11	AWS0017	Spacer, 1/2X 3-1/2	1
12	AWS0112	Spacer, 1/2X 2-3/8	1
13	AWS0113	Idler Arm	1
14		Bolt, 3/8nc X 1-1/4	2
15	AWS0512	Bushing, Bronze	2
16		Nut, 3/8nc Stover Lock	2
17	AWS0024	Sheave, 5V-5.50-4	1
18	AWS0022	Bushing, SD 1-3/8	1
19		Lock Washer ¼ (w18)	3
20		Tap Bolt , 1/4nc X 2 (w18)	3
21	AWS1020	Nut Plate	2
22	AWS1032	Bearing Unit, F207 1 3/8" Cast	2
23		Bolt 1/2nc x 1-1/4	8
24		Lock Washer, 1/2	8
25	AWS0021	Shaft, Secondary	1
26	AWS0032	Bushing, SF 1-3/8	1
27	AWS0026	Sheave, 3Vx19.0-3	1
28		Bolt, 3/8ncX2-1/2 (w/26)	3
29		Lock Washer, 3/8 (w/26)	3
30	AWS0011	Key, 5/16X2	2
31		Bolt, 1/2 nc x 8-1/2	
32		Nut, 1/2nc Stover Lock	1
33		Flat Washer, ½	A/R
34	AWS0111	Idler, 5"	1

Mounting and Drive Components

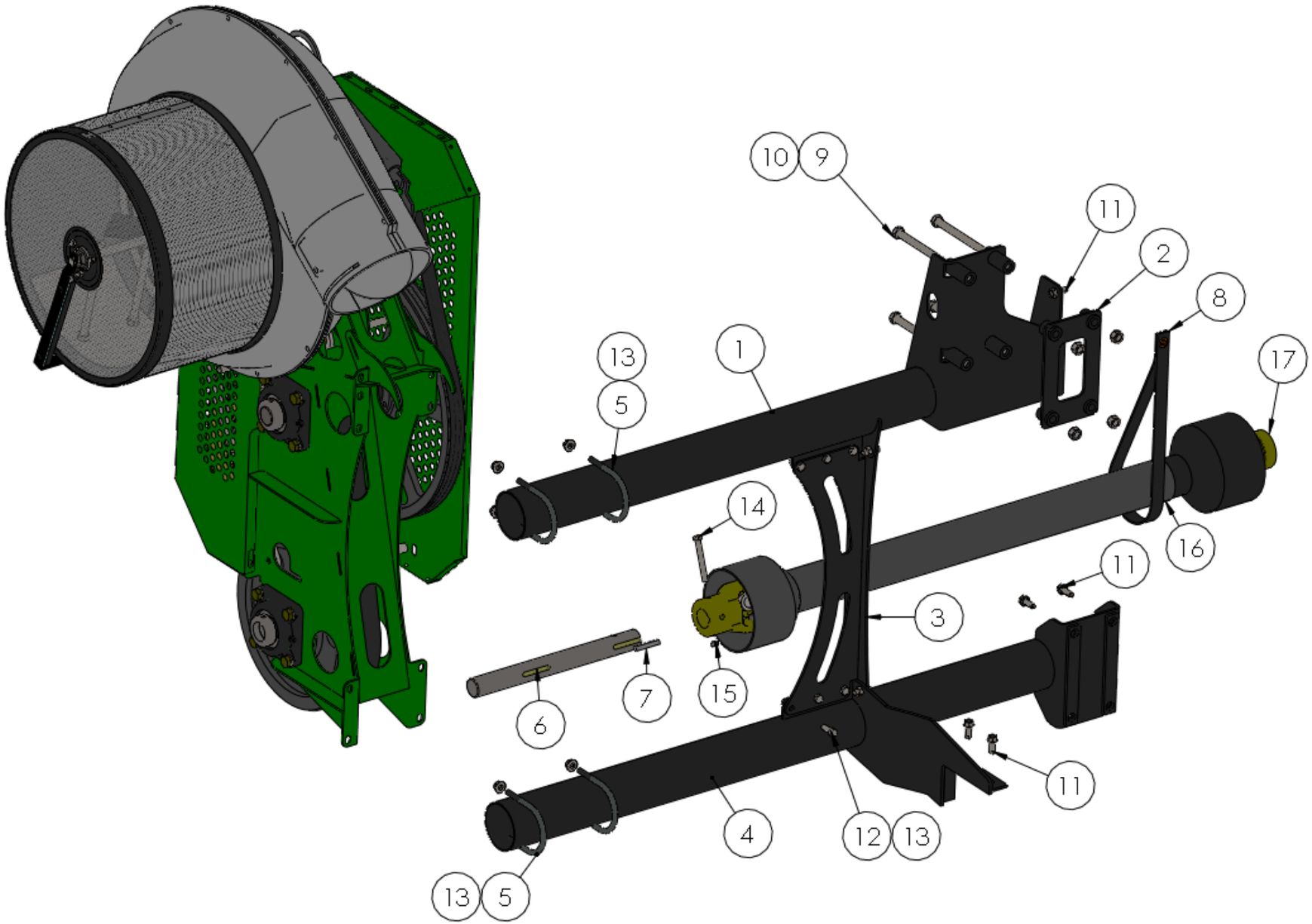

Item #	Part #	Description	Qty.
1	AWS1068	Upper Beam	1
2	AWS1070	Clamp Plate	1
3	AWS0916	Brace	1
4	AWS1069	Lower Beam	1
5	AWS0621	U-Bolt, 3/8nc x 3-1/2	4
6	AWS0294	Shaft, 14” Universal	1
7	AWS0011	Key, 5/16 x 2	1
8	AWS0826	PTO Storage Strap	1
9		Bolt, 1/2 nc x 8”	4
10		½” nc Stover Lock Nut	4
11		3/8” nc x 1” Flanged Hex Self Tap	8
12		Bolt, 3/8nc x 1	10
13		Bolt, 3/8nc x 1-1/4	4
14		Bolt ½ nc x 1”	1
15		½” Flat Washer	2
16		Nut, 3/8nc Flange	18
17		Flat Washer, 3/8	4
18	Call AWS	PTO Shaft Assy. 48” Star Specify Combine Spline	1
19	AWS0453 AWS0451 AWS0449 AWS0454 AWS0455	**PTO COMPONENTS** Replacement Yoke, 1-3/8 Round W/Bolt Replacement Yoke, 21spl Quick Release Replacement Yoke, 1-1/8 Hex Quick Release PTO Cross & Bearing Kit Shield Kit	AR

Manifold Components

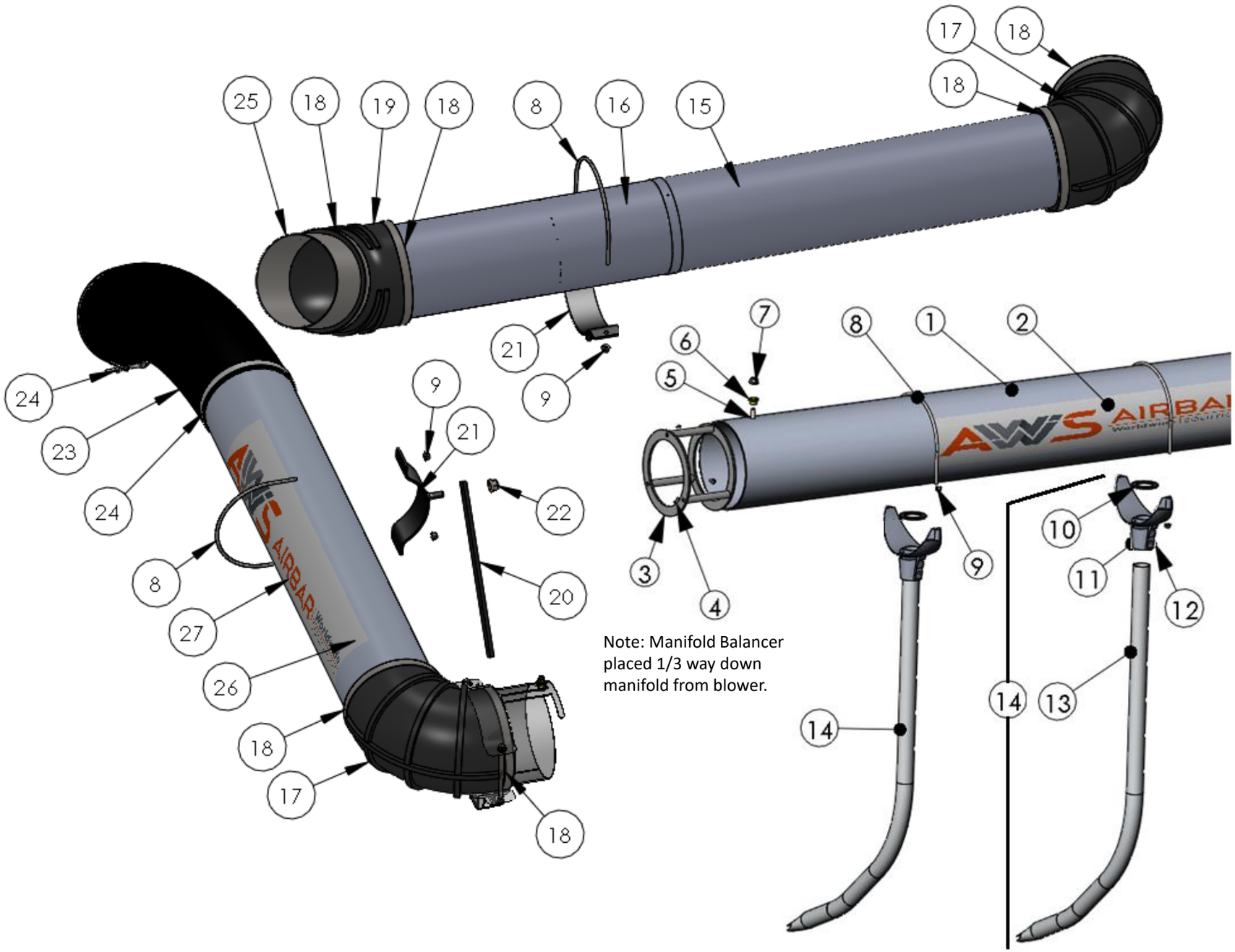

Item #	Part #	Description	Qty.
1	CALL AWS	Replacement Manifold – Call to specify Application (Includes Items 2 (Decal) &3 (Balancer)	AR
2	AWS0781	Decal, Logo 48x8	1
3	AWS0202	Manifold Balancer	1
4		Pop Rivet 3/16 x ¼	3
5		3/8nc x 1 Bolt	1
6	AWS0512	Flange Bushing	1
7		5/16nc nyloc nut	1
8	AWS0163	U-Bolt 1/4nc x 8” S.S (Incl. Item 9)	AR
9		1/4nc Nyloc Nut	AR
10	AWS0116	Nozzle Gasket	AR
11	AWS0760	Nozzle Saddle, Cast w/ Set Screws	AR
12		Set Screw m8x10 S.S.	2
13	AWS0766	Nozzle Tube, 48” Double Bend	AR
14	AWS0769	Nozzle, 48” Double Bend (Incl. Items 10-13) Replaces AWS0757	AR
15	AWS0763	Rear Tube 45”	1
16	AWS0764	Rear Tube Extension 30”	1
17	AWS0091	Elbow 90 x8”	2
18	AWS0086	Hose Clamp 8.75”	8
19	AWS0441	Elbow 45 x 8”	2
20	AWS0090	Transition Tube Support	1
21	AWS0153	Saddle, With Stud	2
22		1/2nc Lock Nut	AR
23	AWS0410	Flex Hose, 60”	1
24	AWS0085	Hose Clamp. 8.25	2
25	AWS0160	Connector Pipe 6”	1
26	AWS0087	Transition Tube – 40” (Incl. Item 27)	1
27	AWS0782	Decal, Logo 24x4	1

End Cap and Lock Sleeve

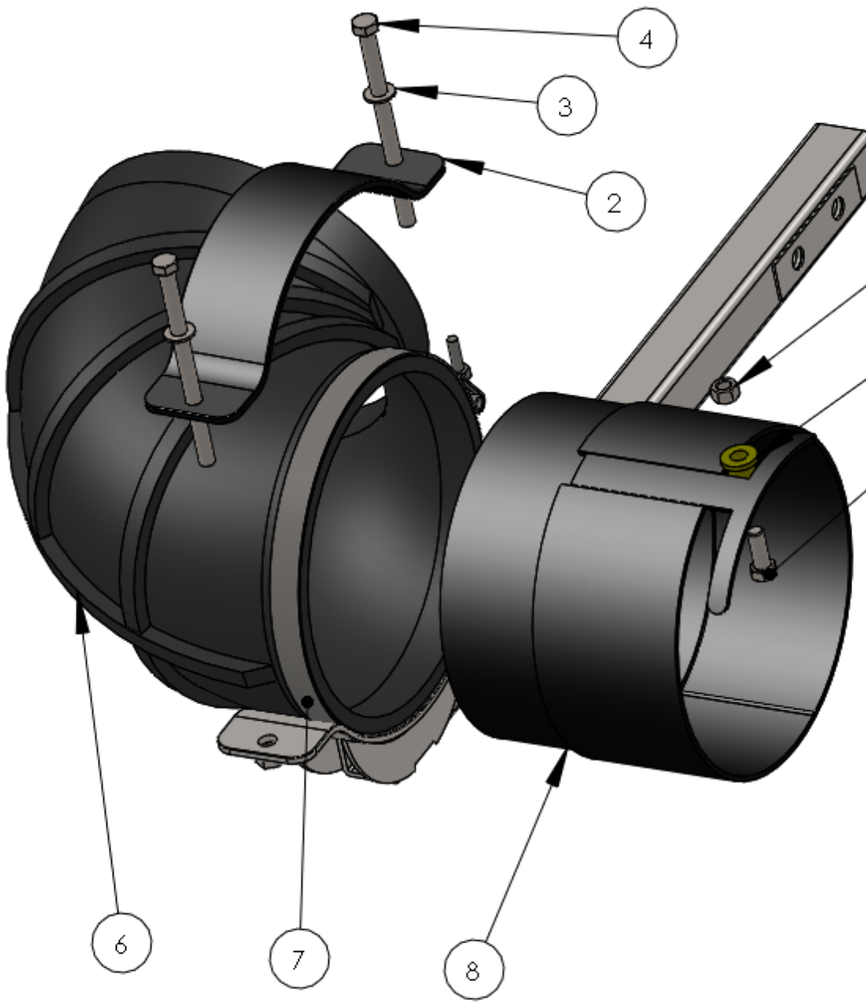

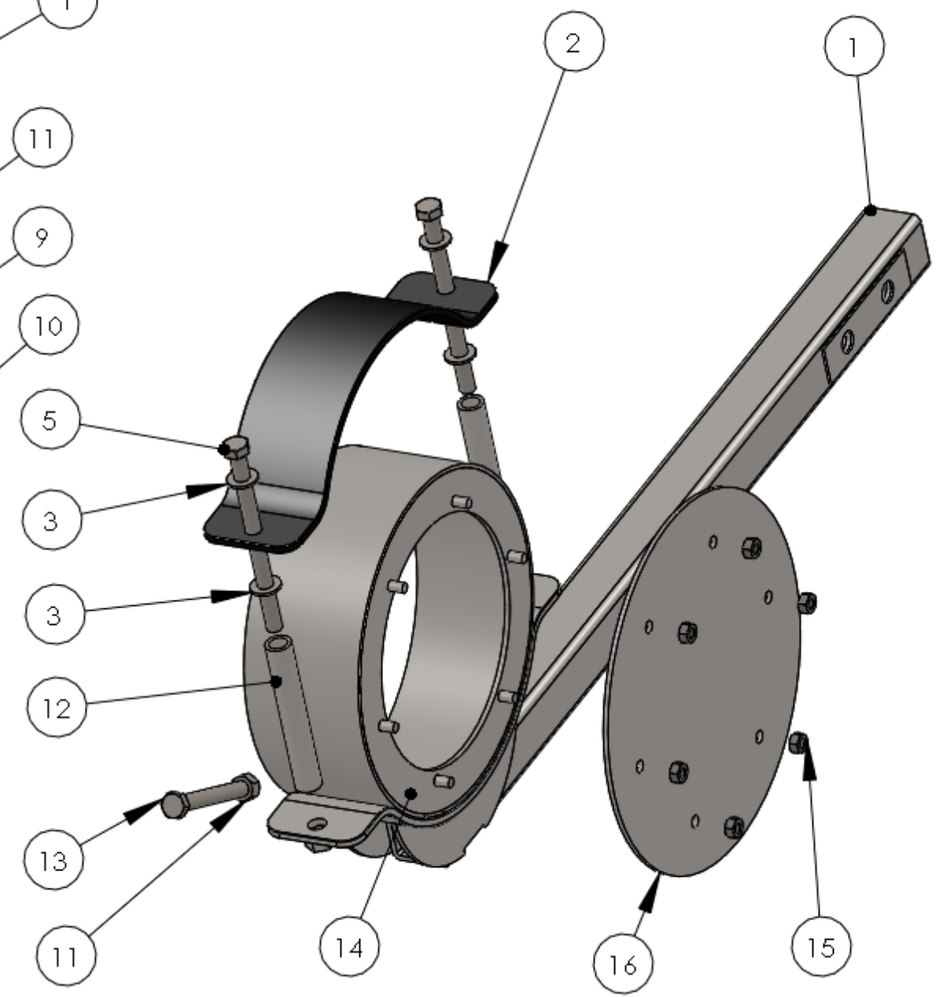

Item #	Part #	Description	Qty.
1	AWS0102	Manifold Arm	2
2	AWS0123	Saddle Clamp	2
3		Washer, 3/8	6
4		Bolt, 3/8ncX 5-1/2, gr8	2
5		Bolt, 3/8nc X 5, gr8	2
6	AWS0091	Elbow, 90	1
7	AWS0086	Hose Clamp, 8.75”	1
8	AWS0092	Lock Sleeve	1
9	AWS0512	Bushing, Shoulder	1
10		Bolt, 3/8nc x 1	1
11		Locknut, 3/8nc	4
12	AWS0479	Spacer, End Cap	2
13		Bolt, 3/8nc x 3	1
14	AWS0810	End Cap Base	1
15		Flange Nut, 1/4nc	6
16	AWS0812	End Cap Cover	1

AWS0819 End Cap Assembly, w/o Lever, includes items 11,13,14,15,16
and replaces AWS0616 End Cap, no lever(-2015)

Centre Pivot Assembly

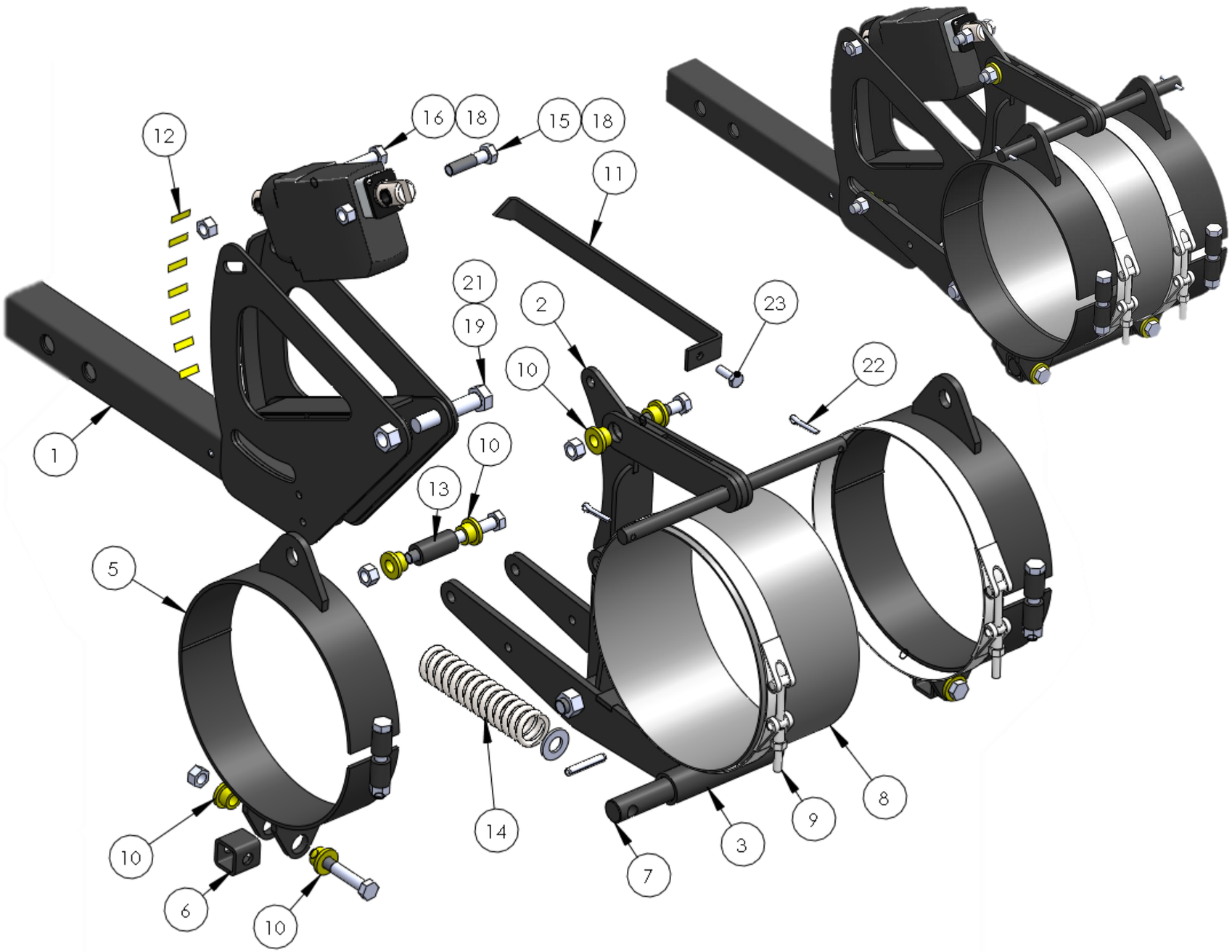

AWS1082– Centre Pivot Assembly
(Includes all except AWS0546 Actuator)

Item #	Part #	Description	Qty.
1	AWS0771	Base Arm – Center Pivot	1
2	AWS0772	Lever – Center Pivot	1
3	AWS1079	Bottom Link – Center Pivot	1
4	AWS1080	Top Link – Center Pivot	1
5	AWS1081	CP Clamp – High Angle	1
6	AWS1085	Spacer – Center Pivot – High Angle	2
7	AWS1083	Pin – Center Pivot – High Angle	1
8	AWS0636	Rubber Coupler	1
9	AWS0085	Hose Clamp. 8.25"	2
10	AWS0512	Shoulder Bushing	8
11	AWS0775	Manifold Arm, Center Tilt Indicator	1
12	AWS0669	Decal, Manifold Tilt	1
13	AWS0776	Spacer 3/8 x 1 3/8	1
14	AWS0777	Spring, Manifold Suspension (Incl. ½" Flat Washer & ¼ x 1-1/2 Roll Pins)	1
15		Bolt, 3/8"nc x 1-1/2"	
16		Bolt, 3/8"nc X 2-1/2"	
17		Bolt, 3/8"nc X 3-1/4"	
18		3/8"nc Stover Lock Nut	
19		Bolt, ½"nc x 2-1/2"	
20		Bolt, ½"x3-1/2"	
21		½"nc Stover Lock Nut	
22		5/32" x 1" Cotter Pin	
23		Bolt,1/4"nc X ¾"	
	AWS1082	**Center Pivot Assembly (No Actuator)**	

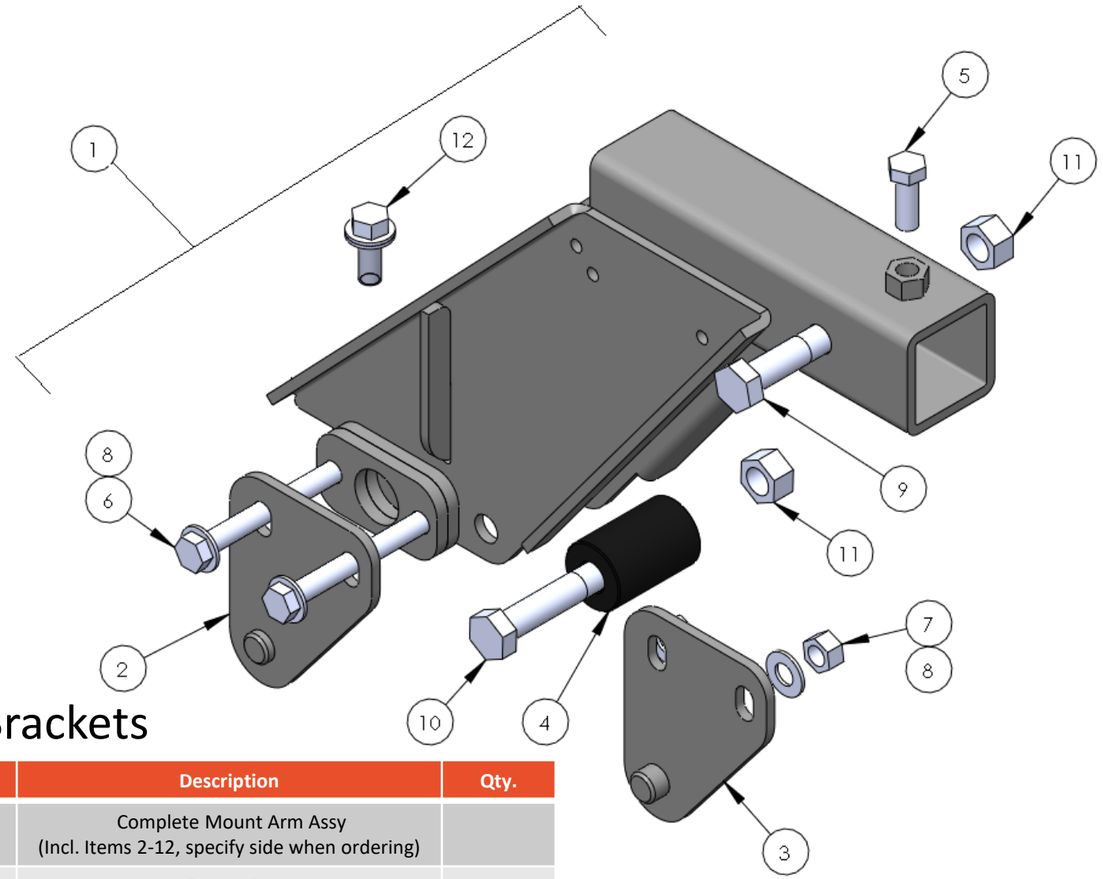

Outer Brackets

Item #	Part #	Description	Qty.
1	AWS1091	Complete Mount Arm Assy (Incl. Items 2-12, specify side when ordering)	
2	AWS1074R	Clamp, RH	1
3	AWS1074L	Clamp, LH	1
4	AWS0538	Roller, UHMW-PE 1-7/8	1
5		3/8” nc x 1” Hex Bolt	1
6		3/8” nc x 4-1/2” Hex Bolt	2
7		3/8” nc Stover Lock Nut	2
8		3/8” Flat Washer	4
9		1/2” nc x 2-1/2” Hex Bolt	1
10		1/2” nc x 3” Hex Bolt	3
11		1/2” nc Stover Lock Nut	2
12		3/8” nc x 1” Flanged Hex Self Tap	1

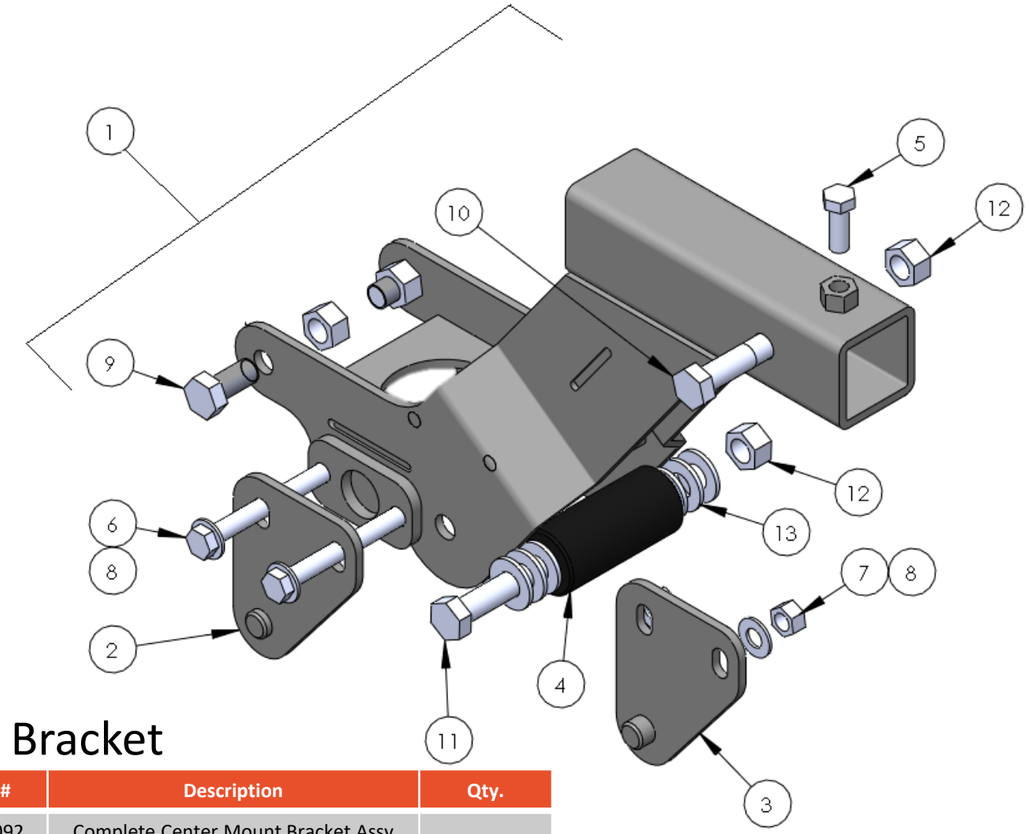

Center Bracket

Item #	Part #	Description	Qty.
1	AWS1092	Complete Center Mount Bracket Assy (Incl. Items 2-13)	
2	AWS1074R	Clamp, RH	1
3	AWS1074L	Clamp, LH	1
4	AWS0704	Roller, UHMW-PE 3” lg	1
5		3/8” nc x 1” Hex Bolt	1
6		3/8” nc x 5-1/2” Hex Bolt	2
7		3/8” nc Stover Lock Nut	2
8		3/8” Flat Washer	4
9		1/2” nc x 1” Hex Bolt	2
10		1/2” nc x 2-1/2” Hex Bolt	1
11		1/2” nc x 4-1/2” Hex Bolt	1
12		1/2” nc Stover Lock Nut	4
13		1/2” Flat Washer	6

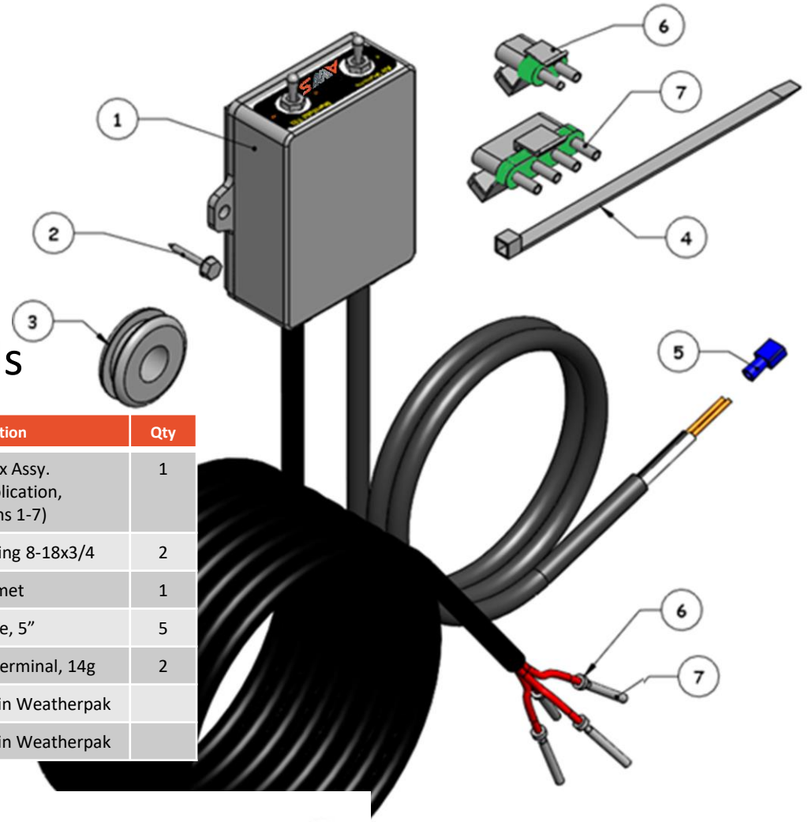

Dual Switch Controls

Item #	Part #	Description	Qty
1	AWS0422	Switch Box Assy. Specify Application, (Incl. Items 1-7)	1
2	HDTHE2ZI81812	Screw, Self Drilling 8-18x3/4	2
3	HNYGR51634116	Grommet	1
4	AWS0264	Cable Tie, 5”	5
5	AWS0402	Female Spade Terminal, 14g	2
6	AWS0097K	Terminal Kit – 2 Pin Weatherpak	
7	AWS0320K	Terminal Kit – 4 Pin Weatherpak	

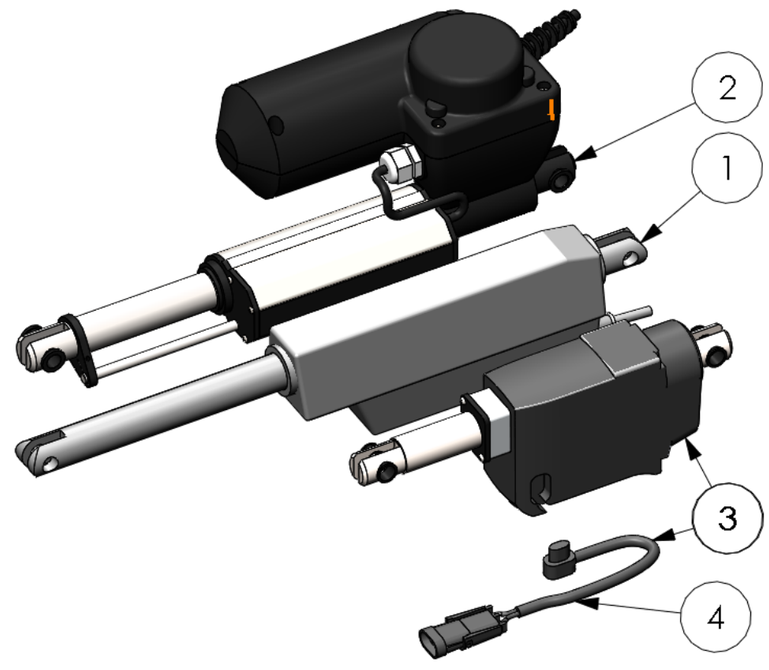

Actuators

Item #	Part #	Description	Qty
1	AWS0095	Actuator, Fan Control LA12	1
2	Call AWS	Actuator, Manifold Tilt LA30 Single Manifold -2014	1
3	AWS0546	Actuator, Manifold Tilt LA23 Single Manifold 2014- (Incl. Item 4)	1
4	AWS0546B	Actuator Harness LA23 (Incl. Clip & Connector, Fits Item 4 only)	1

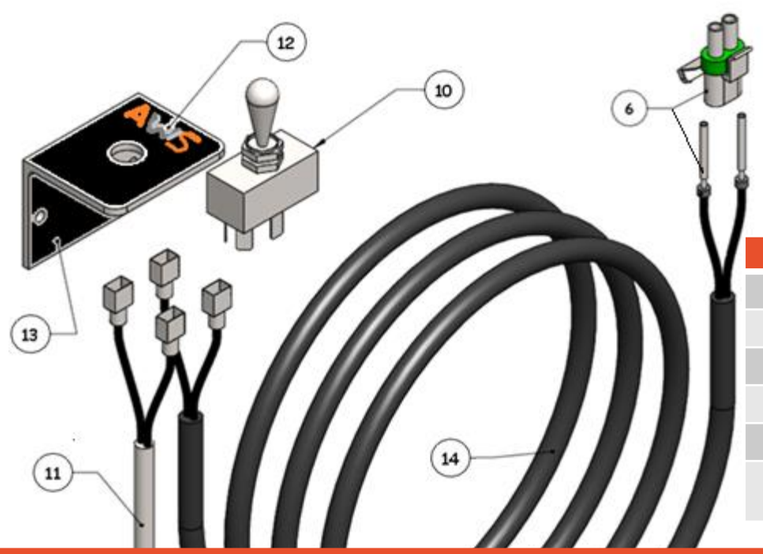

Single Switch Controls

Item #	Part #	Description	Qty
10	AWS0385	Switch, DPDT Crossover	1
11		Power Lead, Specify Application	1
12	AWS0066	Decal, Switch Bracket	1
13	AWS0386	Switch Bracket (Incl. Item 12)	1
14	AWS0099	Combine Harness, Single 20’	1
	AWS0385K	**Single Switch Kit, (Incl. Items 10-14)**	

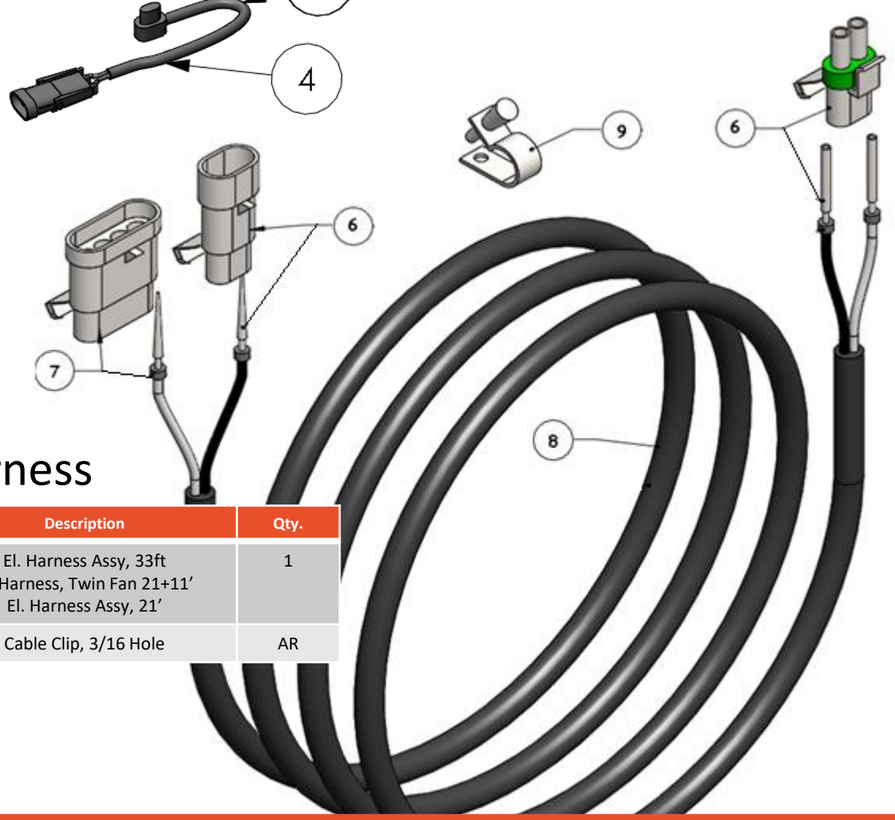

Header Harness

Item #	Part #	Description	Qty.
8	AWS0100 AWS0101 AWS0580	El. Harness Assy, 33ft El. Harness, Twin Fan 21+11’ El. Harness Assy, 21’	1
9	AWS0263	Cable Clip, 3/16 Hole	AR

Spoiler Panels

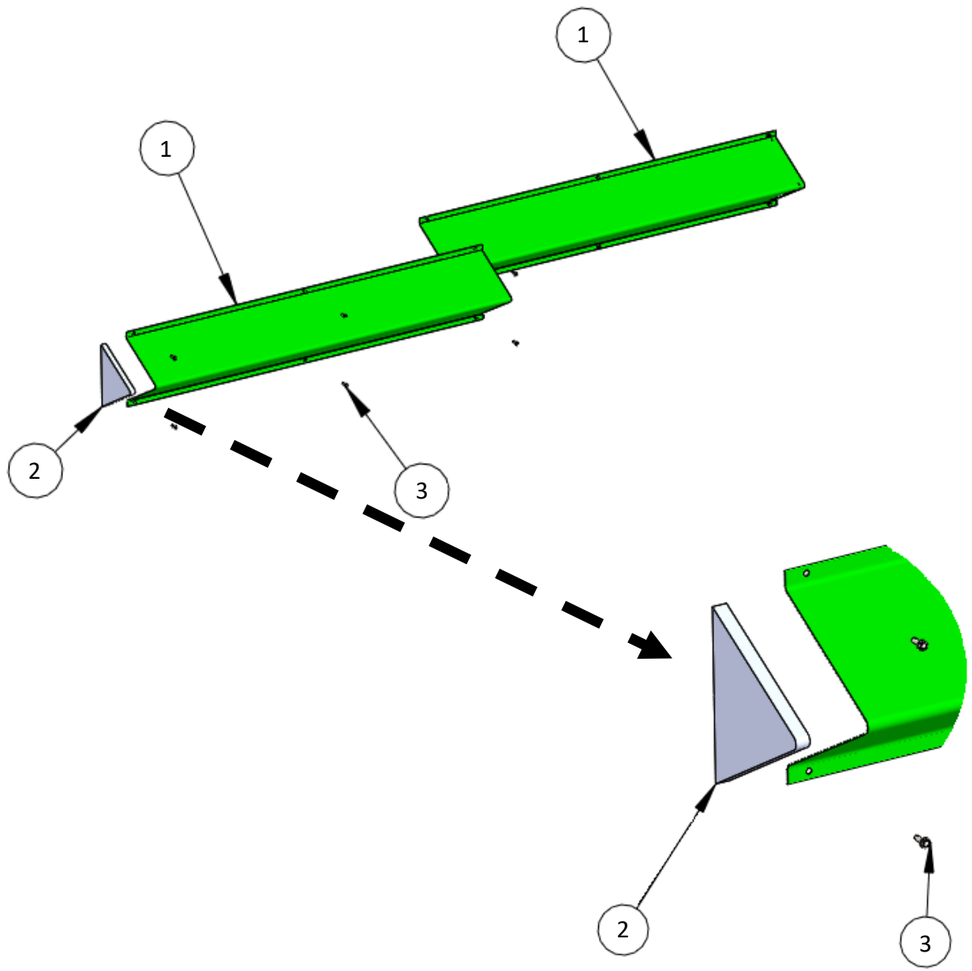

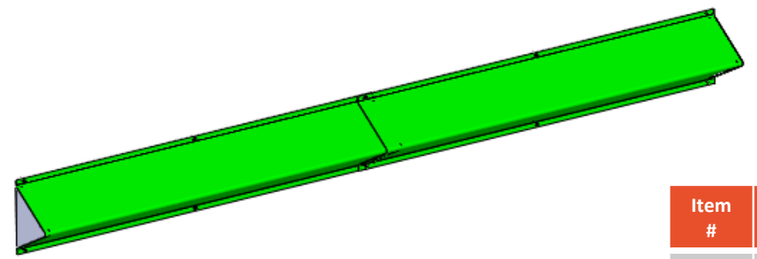

Item #	Part #	Description	Qty.
1	SP36	Spoiler Panel 36	AR
2	SPCAP	Spoiler Cap	AR
3		#8 x ½ Self Drilling Screw	AR

Header	Kit
630FD	SpoilerJD630
635FD	SpoilerJD635
640FD	SpoilerJD640
645FD	SpoilerJD645