AWS PARTS BOOK

New Holland 740cf (After Jan. 2017)

(Single & Dual Drive Headers)

Version 20201216

Parts Order Information

Contact Info:

TEMP Farm Equipment Ltd.
3890 Wellington St. Box 269
Mitchell, Ontario, Canada
N0K-1N0
Ph: 1-877-348-0066 or 519-348-0066
Fax: 519-348-0061

Parts: Craig Rock craigrock@awsairbar.com
Service: Dave Miller dmiller@awsairbar.com
Sales: Zac Corbin zcorbin@awsairbar.com
Sales: Carmen Drost cdrost@awsairbar.com
Development: Mike DeCorte mdecorte@awsairbar.com
Accounting: Melanie Thompson admin@awsairbar.com

Parts Order Information:

To best fulfill your parts requirements, Gather the following information before contacting us:

- Header Make / Model
- AWS Fan SN (location shown in picture)

If you have any questions regarding the suitability of the parts you receive, please call the above number ASAP so that we can assist in ensuring the parts are correct and used properly.

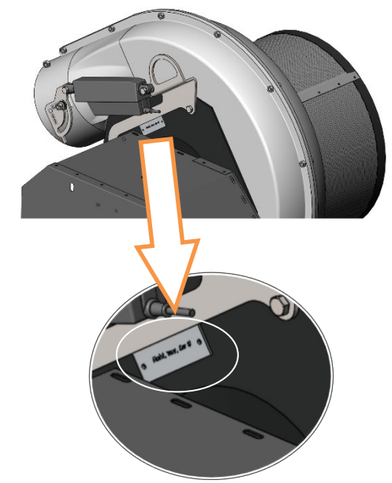

Fan Serial Number Location

The serial number plate for the fan is located on the fan mounting plate, below the throttle actuator mounting bracket.

Terms and Conditions:

1. All goods are F.O.B Mitchell, Ontario, Canada or Minot, ND USA
2. All Parts include 30 day warranty of defects.
3. Please indicate preferred shipment method with order (due to our shipping volume it is typically most cost effective to have parts shipped out prepaid, with shipping costs shown on the parts invoice).
4. Returns accepted within 12 months of purchase, must be unused and are subject to a 10% handling fee. They must be shipped back to AWS prepaid with prior authorization.

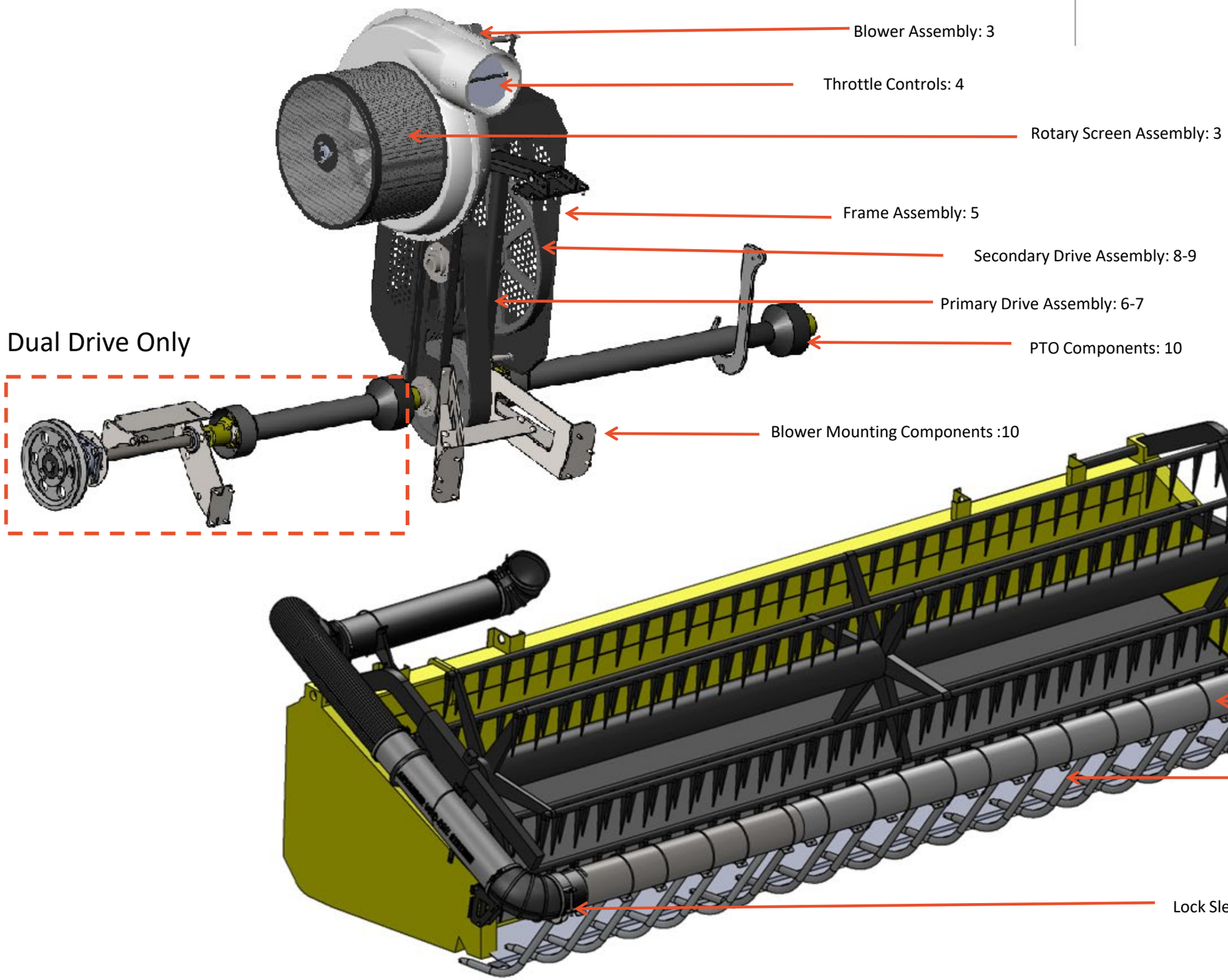

*Electric Controls: 14
* Floor Kit: 15

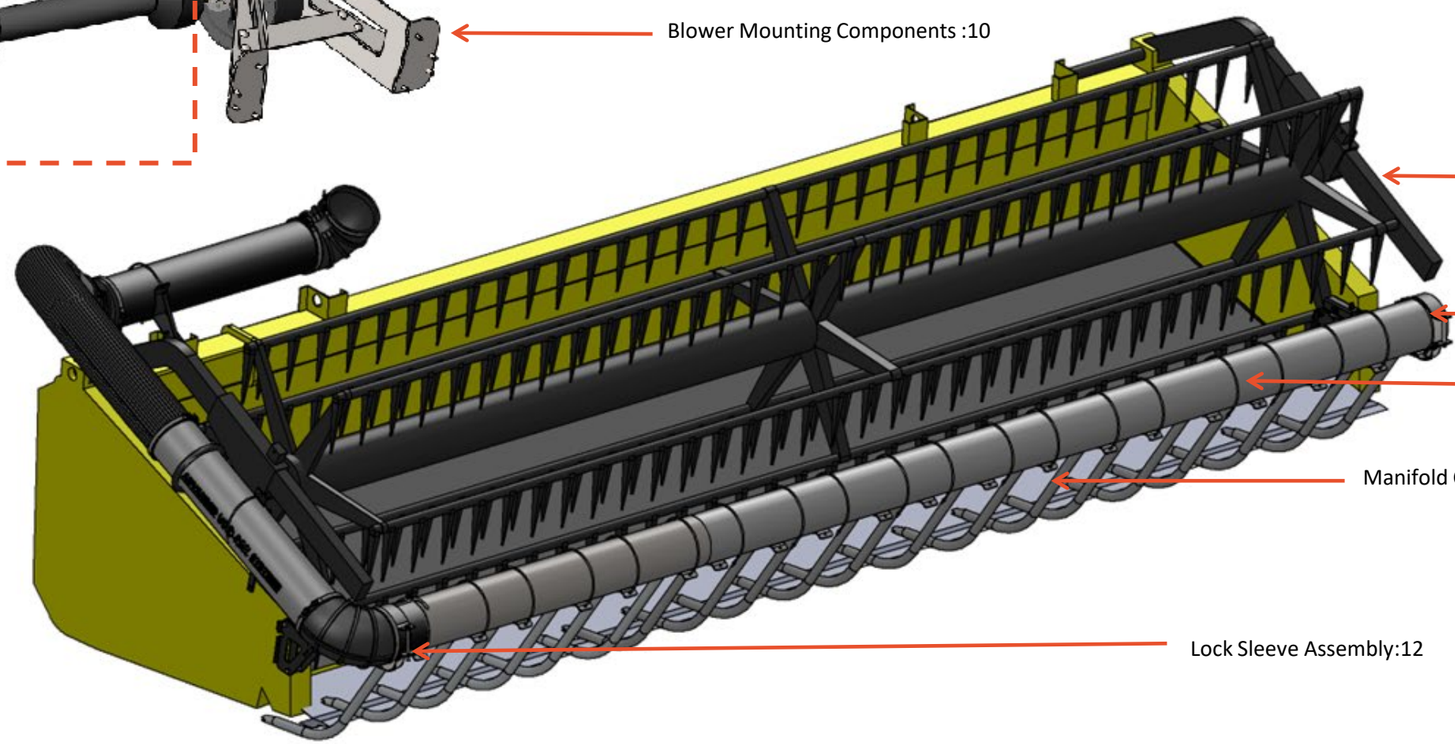

Rotary Screen Assembly

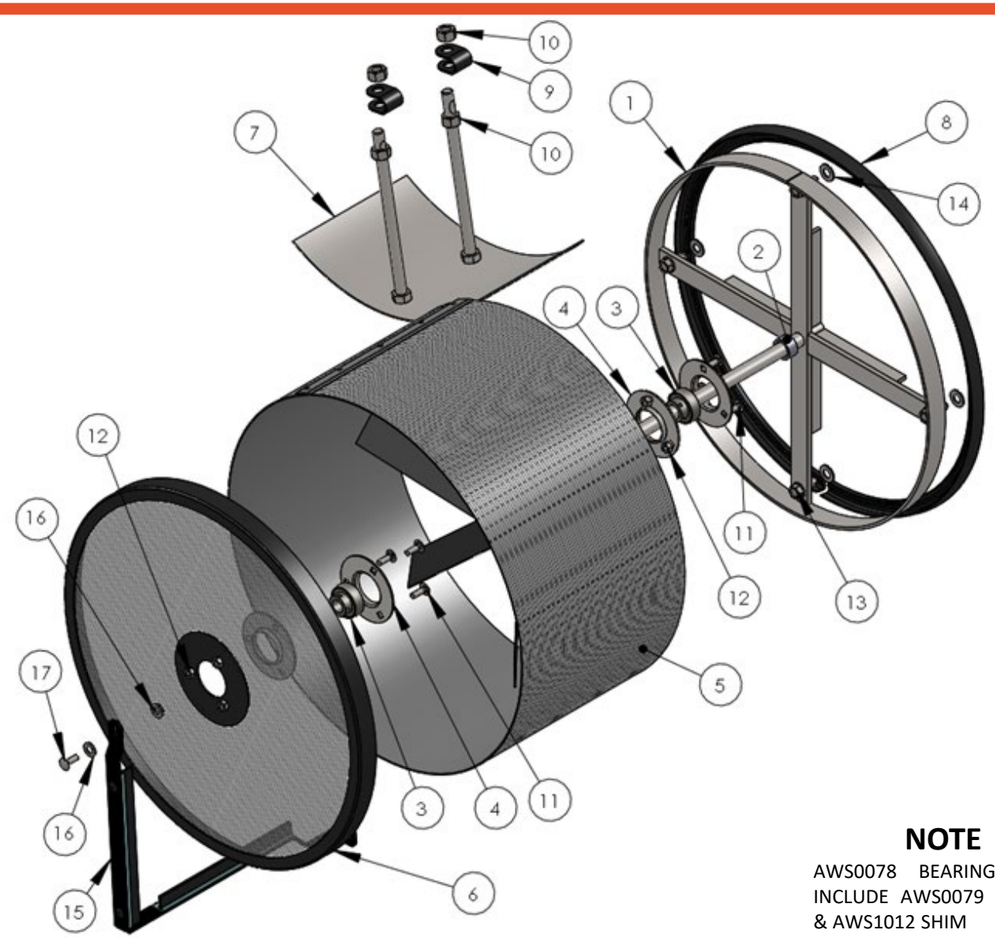

NOTE

AWS0078 BEARINGS NOW INCLUDE AWS0079 FLANGES & AWS1012 SHIM

Ref.	Part Number	Description	Qty.
1	AWS0076	Rotary Screen Support	1
2	AWS0228	Rotary Screen Spacer, 3/4 x 1/2	1
3	AWS0078	Bearing, Rotary Screen, AS202-101 (Includes 2x AWS0079 Flange &AWS1012 Shim)	2
4	AWS0079 AWS1012	Bearing Flange, PF203 Shim, PF203	4 1
5	AWS0077R	Rotary Screen, Right	1
6	AWS0080	Rotary Screen Cap	1
7	AWS0081	Clean Out Plate	1
8	AWS0088	Rotary Screen Seal	Opt

Ref.	Part Number	Description	Qty.
9	AWS0082	Clevis	2
10		1/2 nc Lock Nut	4
11		Bolt, 1/4nc x 3/4 Carriage	6
12		Nut, 1/4 nc Nylock	6
13		Bolt 3/8 nc x 1 Self Tapping	4
14		Washer, 3/8 Flat	4
15	AWS0083	Rotary Screen Brush Assy	1
16		Washer, 5/16 Flat	AR
17		1/4nc x3/4 Button Head Cap, SS	1
	AWS0230	Rotary Screen Assembly (Incl 1-14)	

Blower Assembly

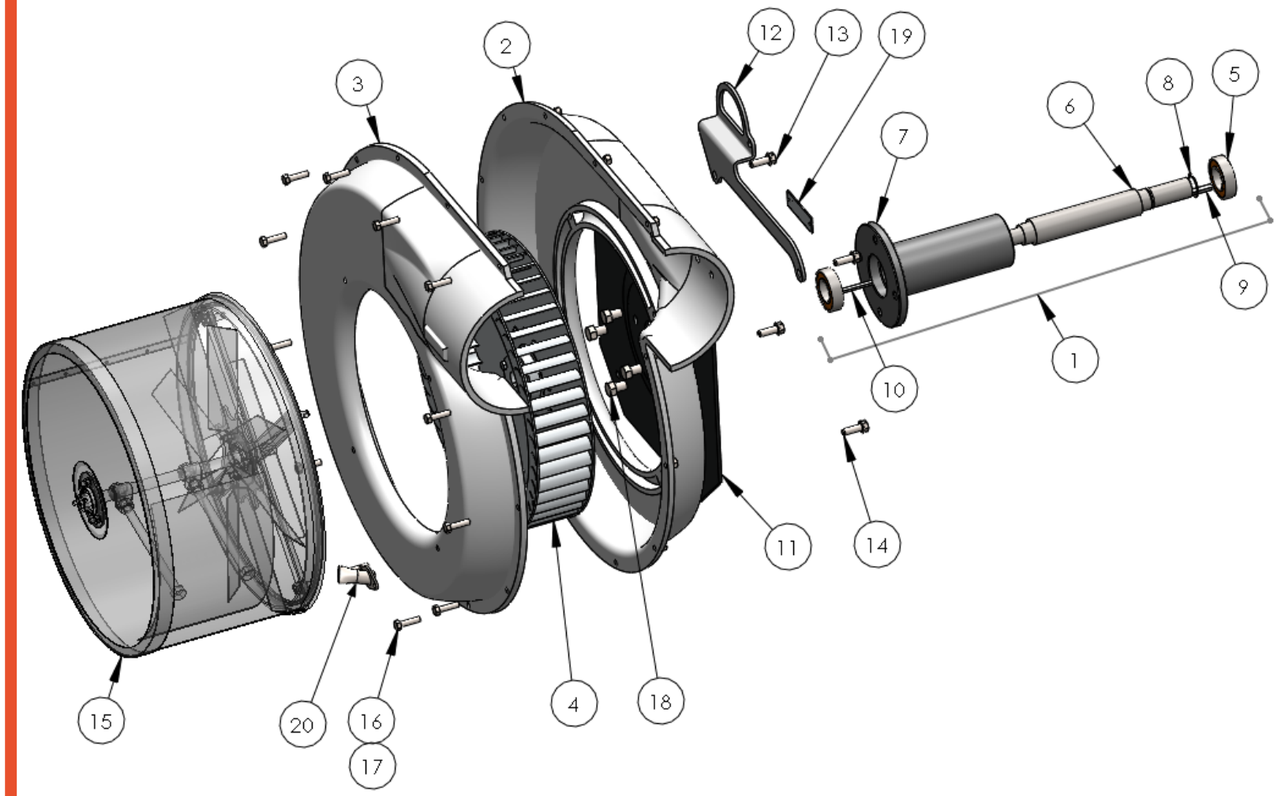

Ref.	Part Number	Description	Qty.
1	AWS0127	Fan Shaft Assembly (Incl. 5-8)	1
2	AWS0068	Fan Housing, LH	1
3	AWS0069	Fan Housing, RH	1
4	AWS0071 AWS0070	Impeller, Right Hand H7/8 Hub (Included with Impeller)	1 1
5	AWS0037	Bearing, Fan Shaft 6206-2RSC3	2
6	AWS0035	Fan Shaft, 14”	1
7	AWS0038	Fan Shaft Housing, 7.5”	1
8	AWS0036	Snap Ring, 1-1/8 EXT.	1
9	AWS0034	Key, 1/4X2	1
10	AWS0073	Key, 3/16X1-1/2	1

Ref.	Part Number	Description	Qty.
11	AWS0067	Fan Plate	1
12	AWS0203	Actuator Mount, See Page 7	1
13		Bolt, 3/8nc x 1-1/4	2
14		Bolt, 3/8nc x 1 Self Tapping Flange	2
15	AWS0230R	Rotary Screen Assembly, See Page 5	1
16		Bolt, 5/16nc x 1-1/4	12
17		Nut, 5/16nc Nylock	12
18		Bolt, ½” nc x ¾”	4
19	AWS0065	Serial Number Plate	1
20	AWS1038R	Rotary Screen Nozzle	1

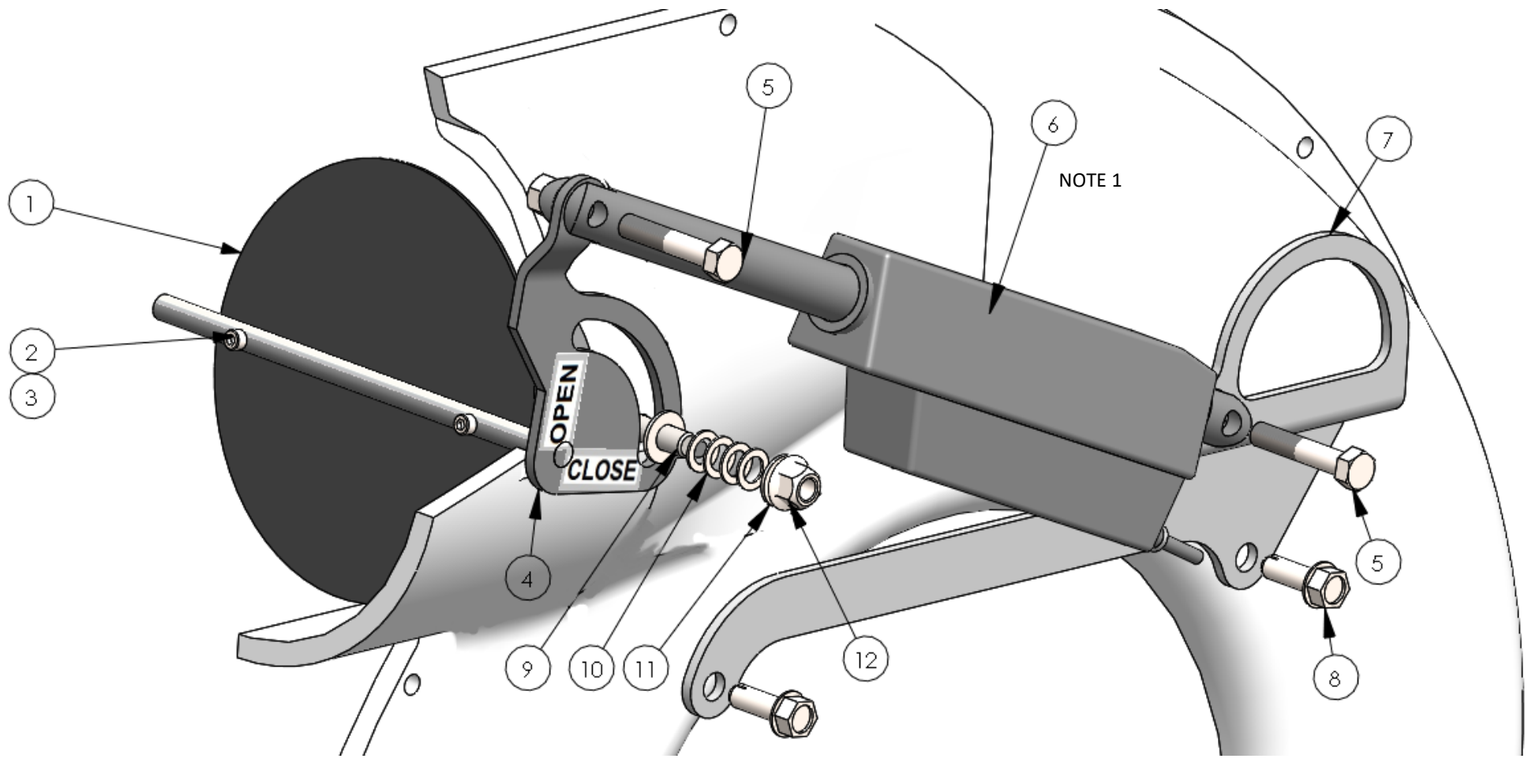

Item #	Part #	Description	Qty.
1	AWS0114	Throttle Plate	1
2	AWS0231	Bolt, 10-32 Socket Head Cap	2
3	AWS0232	Nut, 10-32 SS Nyloc	2
4	AWS0212	Throttle Shaft, RH Electric	1
5	AWS0514	Bolt, Actuator	2
6	AWS0095	Actuator, Throttle Control	1
7	AWS0203	Actuator Mount, RH	1
8		Bolt, 3/8ncX1-1/4	1
9	AWS0171	Stud, M10-1.50	1
10	AWS0170	Spring Washer	4
11		Washer, 3/8 Flat	3
12	AWS0172	Nut, M10-1.50Flange Nyloc	1

NOTES:
1. See Electrical Controls section near back of manual for additional information.

Frame Assembly – to 2020

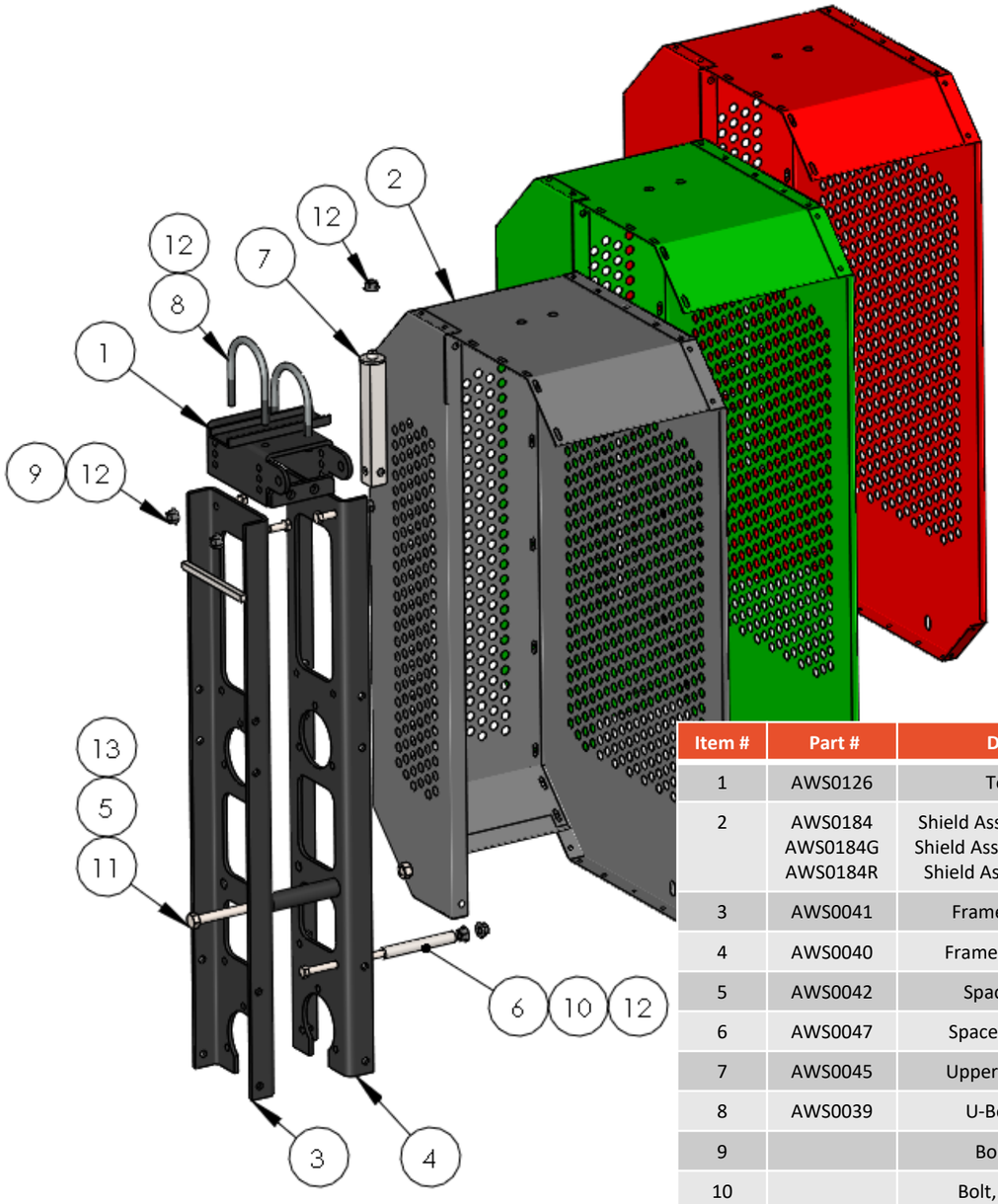

Item #	Part #	Description	Qty.
1	AWS0126	Top Bracket	1
2	AWS0184 AWS0184G AWS0184R	Shield Assembly , RH (Black) Shield Assembly , RH (Green) Shield Assembly , RH (Red)	1
3	AWS0041	Frame Rail, Fan Side	1
4	AWS0040	Frame Rail, Drive Side	1
5	AWS0042	Spacer, ½ x 4-1/4	1
6	AWS0047	Spacer, Lower Shield	1
7	AWS0045	Upper Shield Support	1
8	AWS0039	U-Bolt, 3/8nc x 3	2
9		Bolt, 3/8nc x 1	8
10		Bolt, 3/8nc x 5-1/2	1
11		Bolt, 1/2nc x 5-1/2	1
12		Nut, 3/8nc Serrated Flange	11
13		Nut, 1/2nc Stover Lock	1

2021 & up

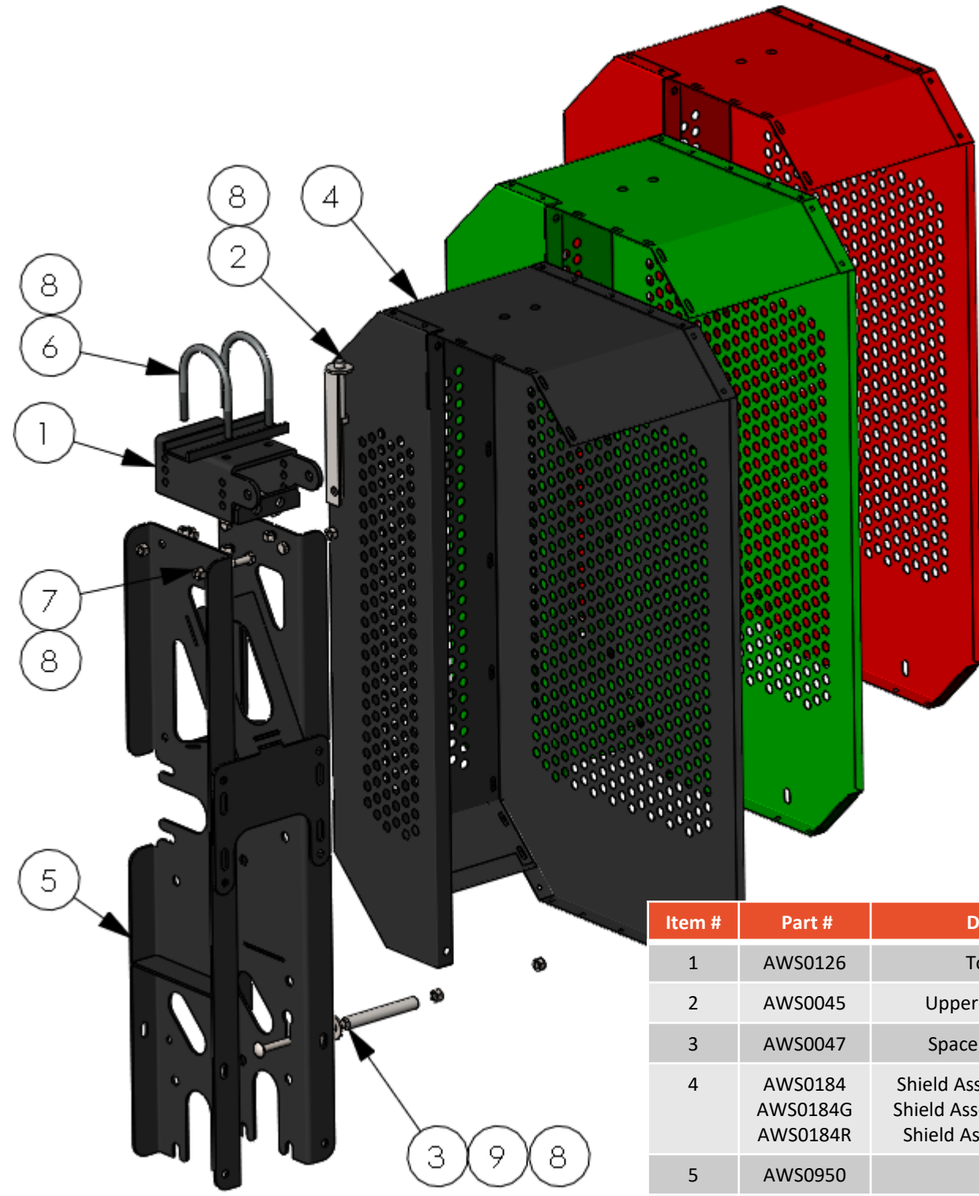

Item #	Part #	Description	Qty.
1	AWS0126	Top Bracket	1
2	AWS0045	Upper Shield Support	1
3	AWS0047	Spacer, Lower Shield	1
4	AWS0184 AWS0184G AWS0184R	Shield Assembly , RH (Black) Shield Assembly , RH (Green) Shield Assembly , RH (Red)	1
5	AWS0950	Chassis	1
6	AWS0039	U-Bolt, 3/8nc x 3	2
7		Bolt, 3/8nc x 1	8
8		Nut, 3/8nc Serrated Flange	15
9		Bolt, 3/8nc x 5-1/2	1

Primary Drive Assembly – to 2020

(3 Bolt Stamped Bearing Flanges)

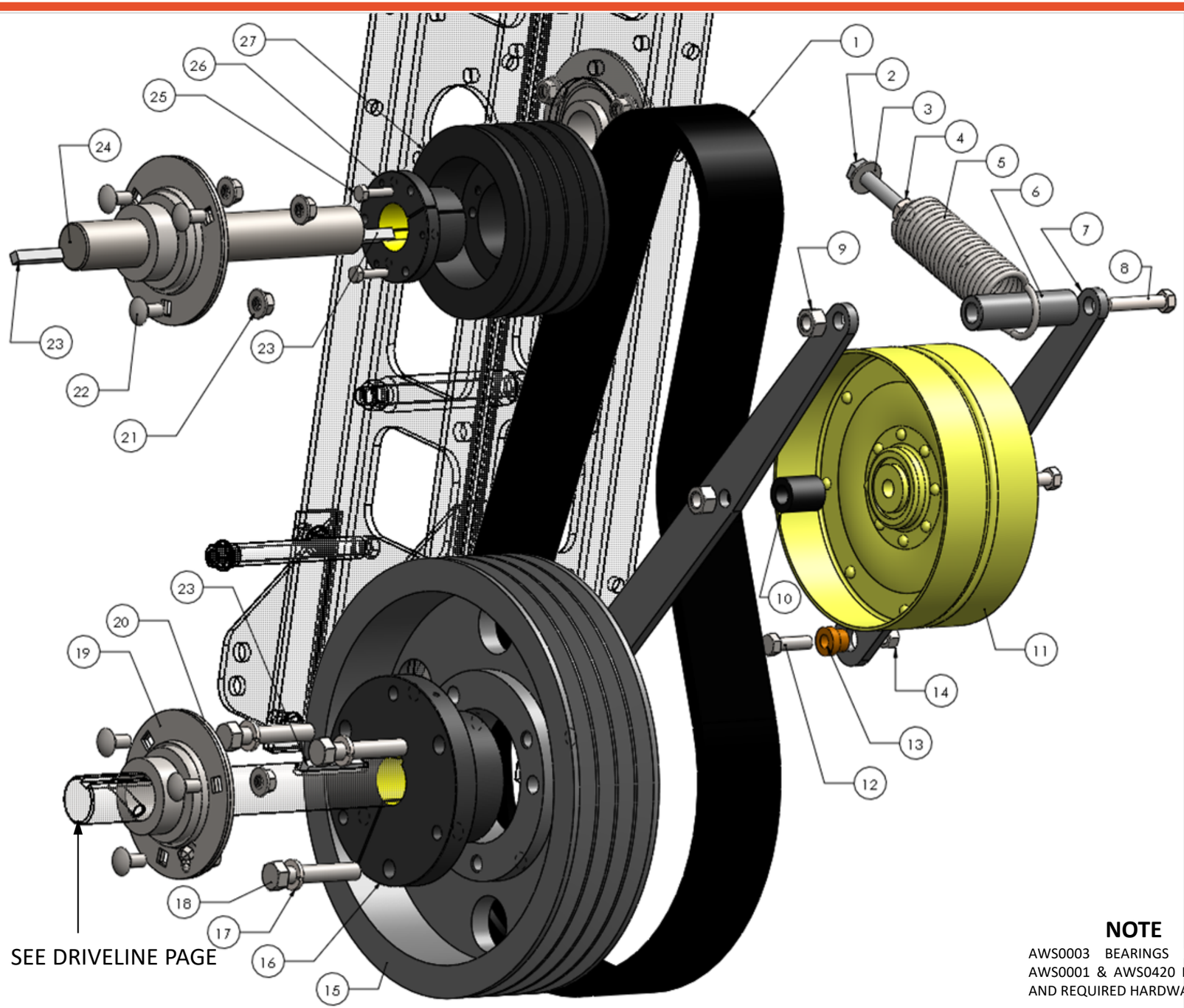

SEE DRIVELINE PAGE

NOTE

AWS0003 BEARINGS INCLUDE AWS0001 & AWS0420 FLANGES AND REQUIRED HARDWARE

Item #	Part #	Description	Qty.
1	AWS0020 AWS0220	Belt, 5VX-630-4 Belt, 5V-630-4BP Premium	1 Opt.
2	AWS0015	Tap Bolt, 7/16nc X 5	1
3		Flat Washer, 7/16	1
4	AWS0016	Jam Nut, 7/16nc	1
5	AWS0014	Spring, Extension (Incl Items 2-4)	1
6	AWS0017	Spacer, 1/2X 3-1/2	1
7	AWS0013	Idler Arm, Primary	2
8		Bolt, 1/2ncX5	2
9		Nut, 1/2nc Stover Lock	2
10	AWS0018	Spacer, 1/2X1-3/16	2
11	AWS0012	Idler, HM Primary	1
12		Bolt, 3/8nc X 1 1/4	2
13	AWS0512	Bushing, Bronze	2
14		Nut, 3/8nc Stover Lock	2
15	AWS0211	Sheave, 5V-12.5-4	1
16	AWS0008	Bushing E 1-3/8	1
17		Lock Washer, ½ (w/16)	3
18		Tap Bolt, 1/2nc X 2-1/2 (w/16)	3
19	AWS0420	Bearing Flange, Greaseable	4
20	AWS0001	Bearing Flange, PF207	4
21		Nut, 3/8nc Flange	12
22		Bolt, 3/8ncX3/4 Carriage	12
23	AWS0011	Key, 5/16 x 2	3
24	AWS0021	Shaft, Secondary HM	1
25		Tap Bolt, 1/4nc X 2 (w/26)	3
26	AWS0022	Bushing, SD 1-3/8	1
27	AWS0024	Sheave, 5V-5.50-4	1
28	AWS0003	Bearing, 1-3/8 w/ Collar (Includes AWS0003 & AWS0420 Flanges)	4

Primary Drive Assembly – 2021 & up

(4 Bolt Cast Bearing Flanges)

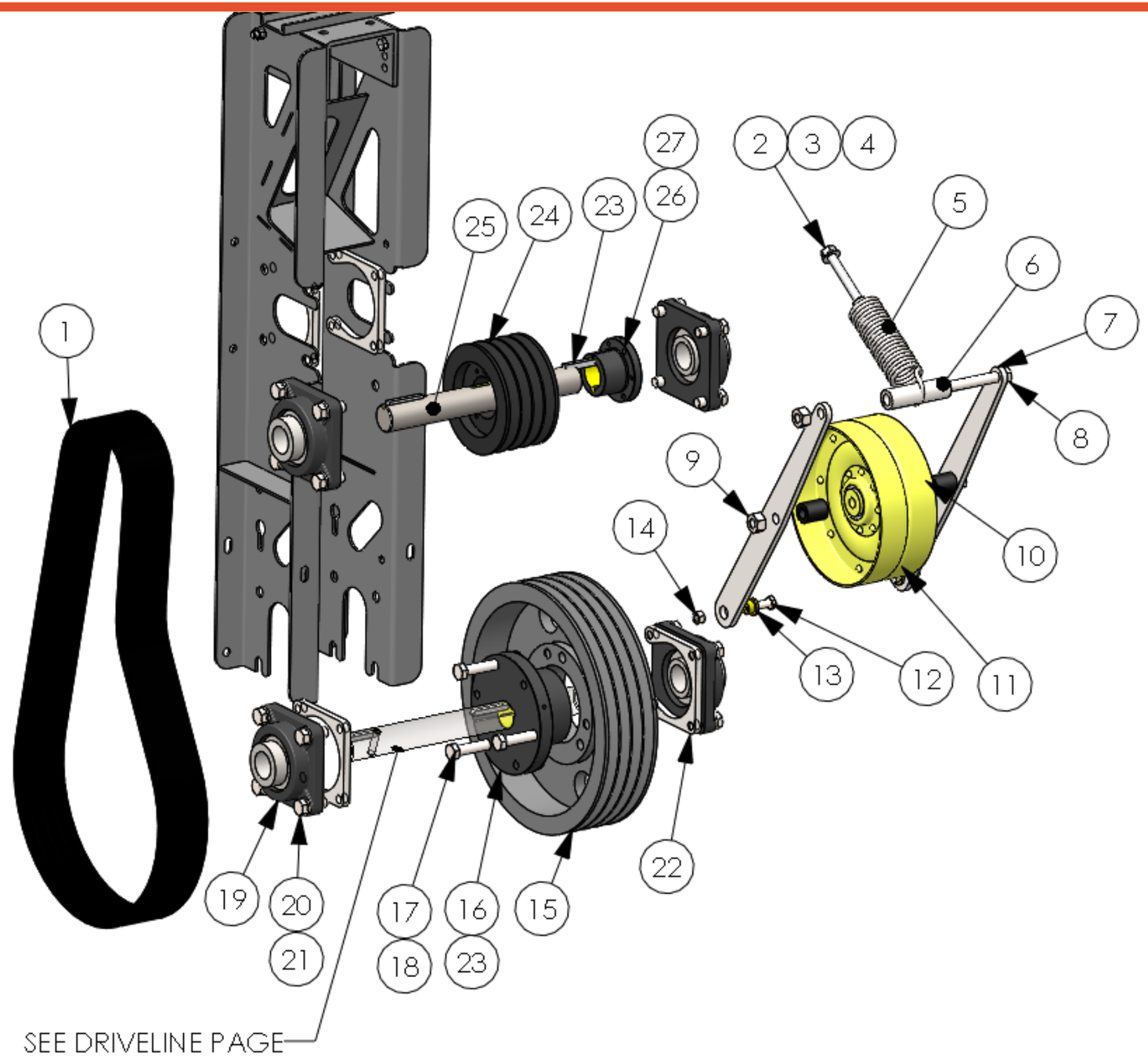

Item #	Part #	Description	Qty.
1	AWS0020 AWS0220	Belt, 5VX-630-4 Belt, 5V-630-4BP Premium	1 Opt
2	AWS0015	Tap Bolt, 7/16nc X 5	1
3		Flat Washer, 7/16	1
4	AWS0016	Jam Nut, 7/16nc	1
5	AWS0014	Spring, Extension (Incl. Items 2-4)	1
6	AWS0017	Spacer, 1/2X 3-1/2	1
7	AWS0013	Idler Arm, Primary	2
8		Bolt, 1/2ncX5	2
9		Nut, 1/2nc Stover Lock	2
10	AWS0018	Spacer, 1/2X1-3/16	2
11	AWS0012	Idler, HM Primary	1
12		Bolt, 3/8nc X 1 1/4	2
13	AWS0512	Bushing, Bronze	2
14		Nut, 3/8nc Stover Lock	2
15	AWS0211	Sheave, 5V-12.5-4	1
16	AWS0008	Bushing E 1-3/8	1
17		Lock Washer, ½ (w/16)	3
18		Tap Bolt, 1/2nc X 2-1/2 (w/16)	3
19	AWS1032	Bearing Unit – F207 1-3/8	4
20		Bolt, 1/2ncX1-1/4	16
21		Lock Washer, 1/2	16
22	AWS1020	Nut Plate, 1/2nc	4
23	AWS0011	Key, 5/16 x 2	3
24	AWS0024	Sheave, 5V-5.50-4	1
25	AWS0021	Shaft, Secondary HM	1
26	AWS0022	Bushing, SD 1-3/8	1
27		Tap Bolt, 1/4nc X 2 (w/26)	3

Secondary Drive Assembly – to 2019

(3 Bolt Stamped Bearing Flanges)

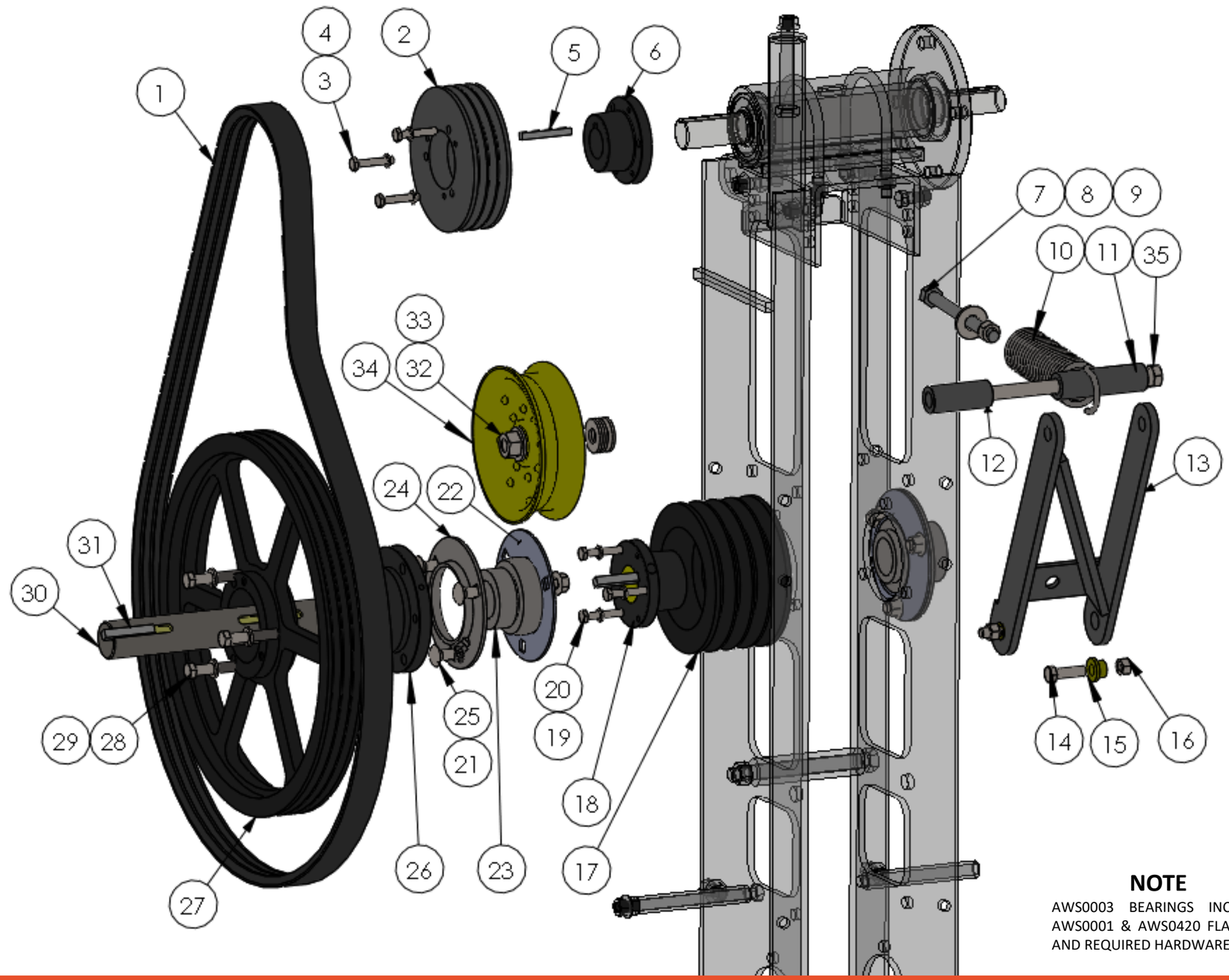

NOTE

AWS0003 BEARINGS INCLUDE AWS0001 & AWS0420 FLANGES AND REQUIRED HARDWARE

Item #	Part #	Description	Qty.
1	AWS0110	Belt, 3VX-670-3	1
2	AWS0030	Sheave, 3V-4.75-3	1
3		Tap Bolt, 1/4nc X 1-1/2 (w/6)	3
4		Lock Washer ¼ (w/6)	3
5	AWS0034	Key, 1/4X1-1/4	1
6	AWS0033	Bushing SDS 1-1/8	1
7	AWS0015	Tap Bolt, 7/16nc X 5	1
8		Flat Washer, 7/16	1
9	AWS0016	Jam Nut, 7/16	1
10	AWS0014	Spring, Extension (Incl. Items 7-9)	1
11	AWS0017	Spacer, 1/2X 3-1/2	1
12	AWS0459	Spacer, 1/2X 2	1
13	AWS0113	Idler Arm	1
14		Bolt, 3/8nc X 1-4	2
15	AWS0512	Bushing, Bronze	2
16		Nut, 3/8nc Stover Lock	2
17	AWS0024	Sheave, 5V-5.50-4	1
18	AWS0022	Bushing, SD 1-3/8	1
19		Lock Washer ¼ (w18)	3
20		Tap Bolt , 1/4nc X 2 (w18)	3
21		Nut, 3/8nc Flange	6
22	AWS0001	Bearing Flange, PF207	2
23	AWS0003	Bearing, 1-3/8 Wide Race w/ Collar (Includes AWS0003 & AWS0420 Flanges)	2
24	AWS0420	Bearing Flange, Greaseable	2
25		Bolt, 3/8nc X3/4 Carriage	6
26	AWS0028	Bushing, SF 1-3/8	1
27	AWS0027	Sheave, 3V-14.0-3	1
28		Tap Bolt, 3/8nc X 2-1/2 (w/26)	3
29		Lock Washer, 3/8 (w/26)	3
30	AWS0021	Shaft, Secondary	1
31	AWS0011	Key, 5/16X2	2
32		Nut, 1/2nc Stover Lock	1
33		Flat Washer, ½	A/R
34	AWS0119	Idler, 8”	1
35		Bolt, 1/2 nc x 8-1/2	1

Secondary Drive Assembly– 2020 & up

(4 Bolt Cast Bearing Flanges)

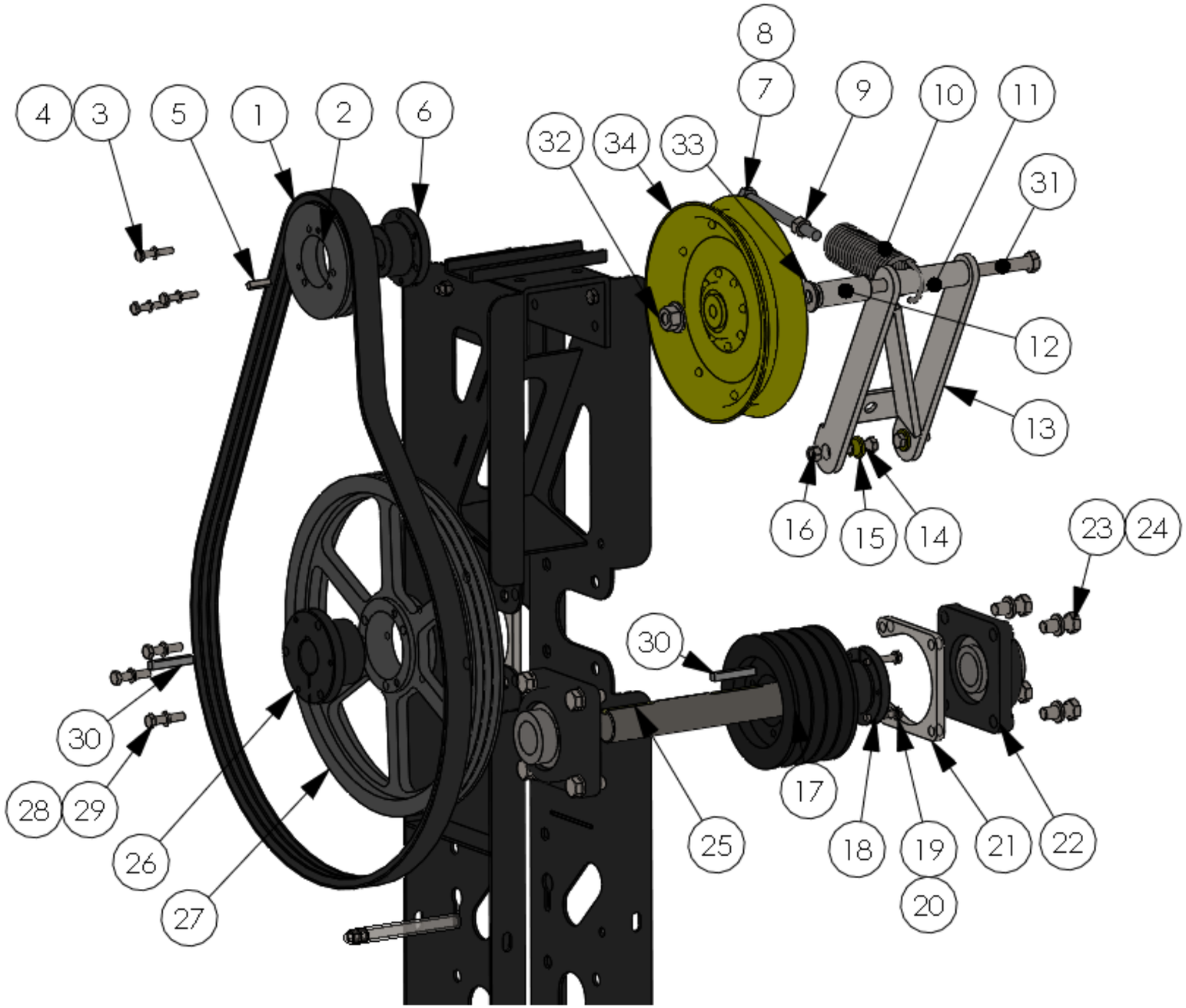

Item #	Part #	Description	Qty.
1	AWS0110	Belt, 3VX-670-3	1
2	AWS0030	Sheave, 3V-4.75-3	1
3		Tap Bolt, 1/4nc X 1-1/2 (w/6)	3
4		Lock Washer ¼ (w/6)	3
5	AWS0034	Key, 1/4X1-1/4	1
6	AWS0033	Bushing SDS 1-1/8	1
7	AWS0015	Tap Bolt, 7/16nc X 5	1
8		Flat Washer, 7/16	1
9	AWS0016	Jam Nut, 7/16	1
10	AWS0014	Spring, Extension (Incl. Items 7-9)	1
11	AWS0017	Spacer, 1/2X 3-1/2	1
12	AWS0459	Spacer, 1/2X 2	1
13	AWS0113	Idler Arm	1
14		Bolt, 3/8nc X 1-1/4	2
15	AWS0512	Bushing, Bronze	2
16		Nut, 3/8nc Stover Lock	2
17	AWS0024	Sheave, 5V-5.50-4	1
18	AWS0022	Bushing, SD 1-3/8	1
19		Lock Washer ¼ (w18)	3
20		Tap Bolt , 1/4ncX2 (w18)	3
21	AWS1020	Nut Plate	2
22	AWS1032	Bearing Unit, F207 1 3/8" Cast	2
23		Bolt 1/2nc x 1-1/4	8
24		Lock Washer, 1/2	8
25	AWS0021	Shaft, Secondary	1
26	AWS0028	Bushing, SK 1-3/8	1
27	AWS0027	Sheave, 3V-14.0-3	1
28		Tap Bolt, 3/8ncX2-1/2 (w/26)	3
29		Lock Washer, 3/8 (w/26)	3
30	AWS0011	Key, 5/16X2	2
31		Bolt, 1/2 nc x 8-1/2	
32		Nut, 1/2nc Stover Lock	1
33		Flat Washer, ½	A/R
34	AWS0119	Idler, 8"	1

Mounting and Drive Components

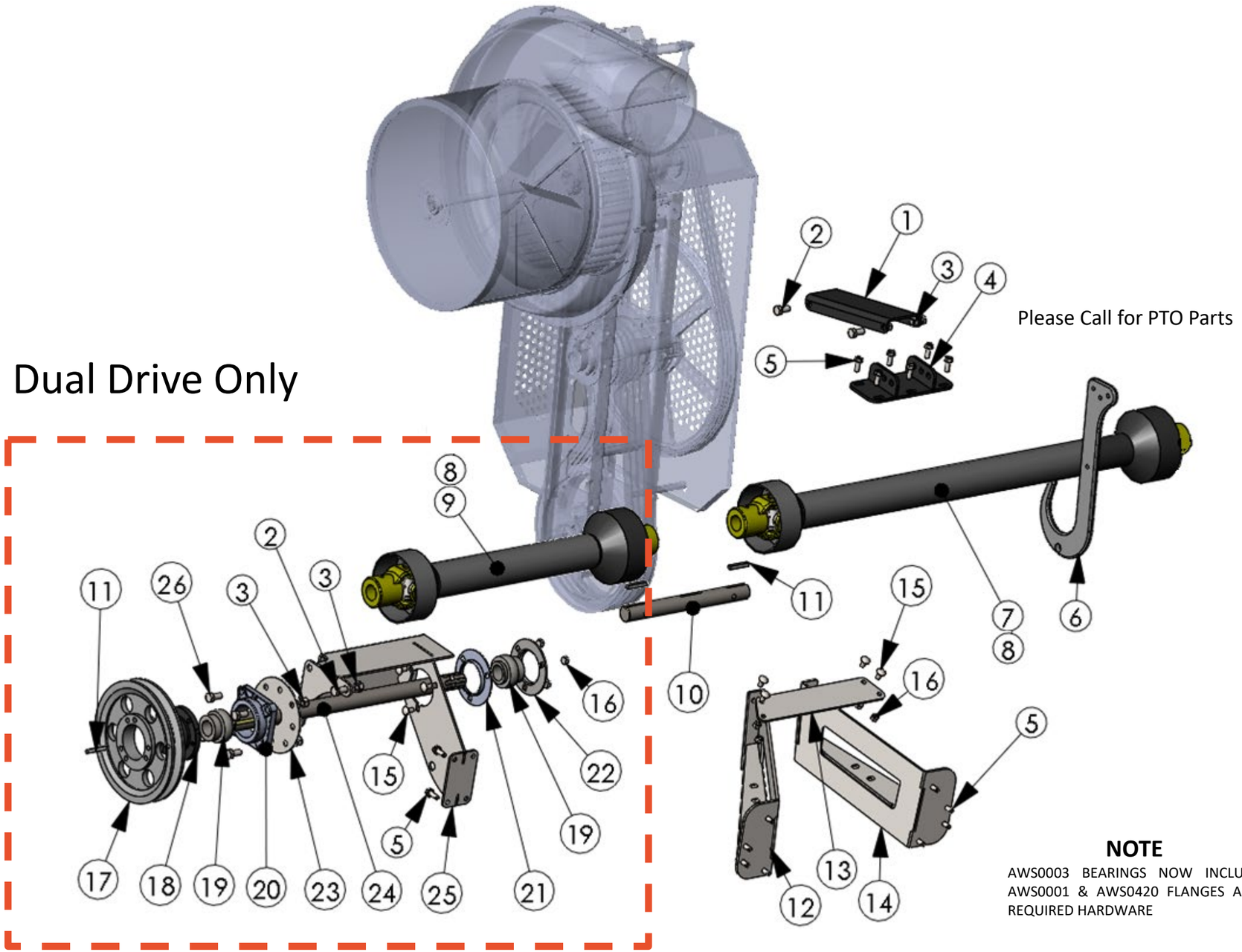

Item #	Part #	Description	Qty.
1	AWS0413	Top Link, 11”	1
2		1/2nc X 1 Bolt	AR
3		1/2nc Lock Nut	AR
4	AWS0425	Universal Top Link Bracket	1
5		3/8nc X 1 Flange Head Self Tapping Bolt	AR
6	AWS0827	PTO Storage Hook	1
7	AWS0861 AWS0957	PTO Assy. 6spl x 1-3/8rb X 64” lg PTO Assy. 21spl x 1-3/8rb X 64” lg	1
8	AWS0453 AWS0451 AWS0449 AWS0454 AWS0455	**PTO COMPONENTS** Replacement Yoke, 1-3/8 Round W/Bolt Replacement Yoke, 21spl Quick Release Replacement Yoke, 1-1/8 Hex Quick Release PTO Cross & Bearing Kit Shield Kit	AR
9	CALL AWS	PTO Assy 6spl x 1-3/8rb	1
10	AWS0294 AWS0670	Shaft, 14” Universal (Single Drive) Shaft, CNH 3074 (Dual Drive)	1
11	AWS0011	Key, 5/16 x 2	4
12	AWS0906	3074DD Base Bracket RH	1
13	AWS0908	3074DD Base Bracket Strap	1
14	AWS0907	3074DD Base Bracket LH	1
15		3/8nc x ¾ Carriage Bolt	AR
16		3/8nc Flange Nut	AR
17	AWS0912 AWS0309	Sheave, 1C-9.50 (Case) Sheave, 1C-10.0 (NH)	1 1
18	AWS0032	Bushing, SF1-3/8	1
19	AWS0003	Bearing, 1-3/8 w/ Collar (Includes AWS0003 & AWS0420 Flanges)	1
20	AWS1032	Bearing Unit - F207 1-3/8	1
21	AWS0001	Bearing Flange PF207	1
22	AWS0420	Bearing Flange, Greasable	1
23	AWS0909	Bearing Adaptor Template	1
24	AWS0910	3074DD End Shaft	1
25	AWS0911	3074DD Bearing Support	1
26		1/2nc X 1-1/2 Bolt	4

NOTE

AWS0003 BEARINGS NOW INCLUDE AWS0001 & AWS0420 FLANGES AND REQUIRED HARDWARE

Manifold Components

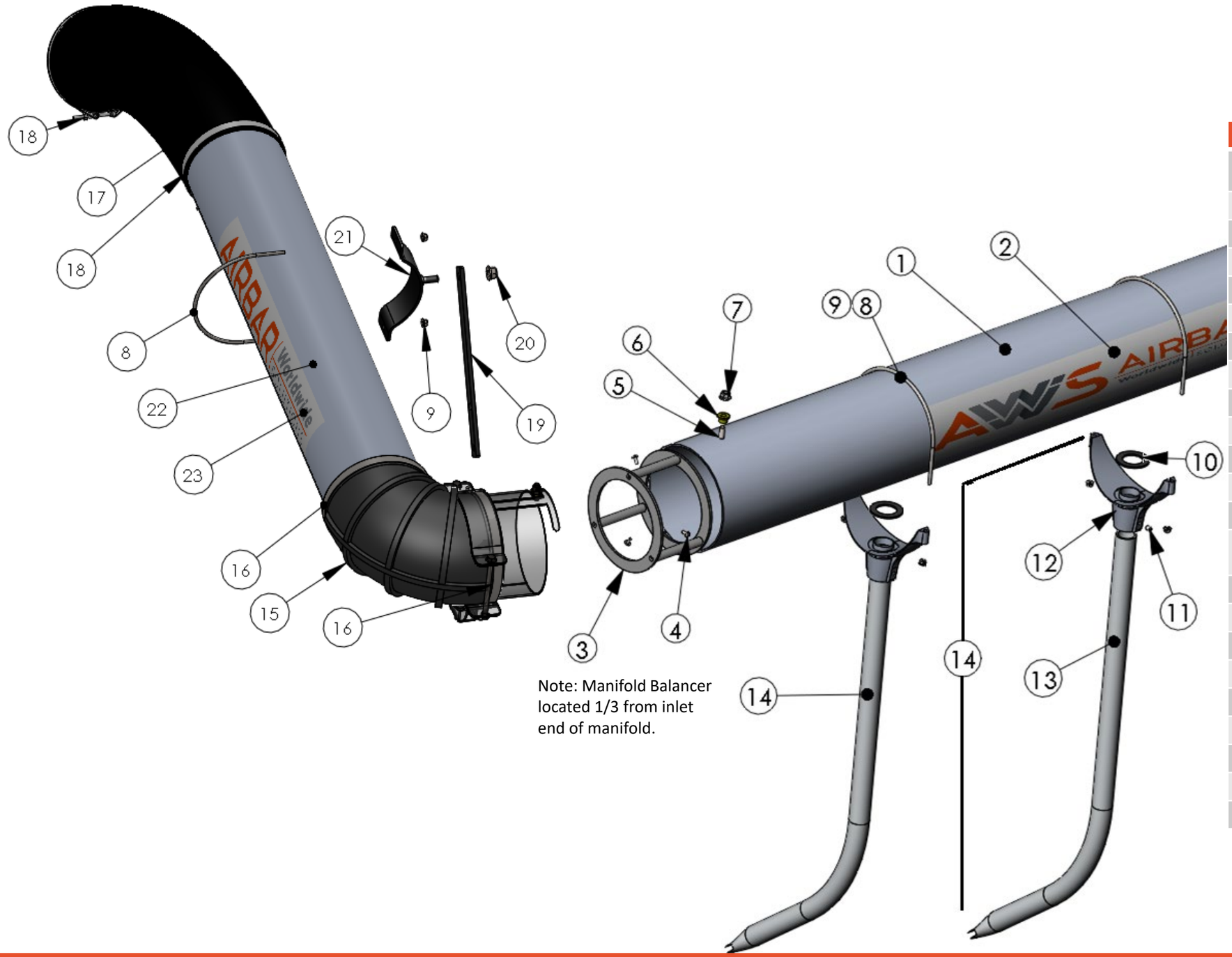

Note: Manifold Balancer located 1/3 from inlet end of manifold.

Item #	Part #	Description	Qty.
1	CALL AWS	Replacement Manifold – Call to specify Application (Includes Items 2 (Decal) &3 (Balancer)	AR
2	AWS0781	Decal, Logo 48x8	1
3	AWS0202	Manifold Balancer	1
4		Pop Rivet 3/16 x ¼	3
5		3/8nc x 1 Bolt	1
6	AWS0512	Flange Bushing	1
7		3/8 nc nyloc nut	1
8	AWS0163	U-Bolt 1/4nc x 8” S.S (Incl. Item 9)	AR
9		1/4nc Nyloc Nut	AR
10	AWS0116	Nozzle Gasket	AR
11		Set Screw m8x10 S.S.	2
12	AWS0760	Nozzle Saddle, Cast w/ Set Screws	AR
13	AWS0762	Nozzle Tube, 42”	AR
14	AWS0767	Nozzle, 42” (Incl. Items 10-3) Replaces AWS0177	AR
15	AWS0091	Elbow 90 x8”	2
16	AWS0086	Hose Clamp 8.75”	8
17	AWS0410	Flex Hose, 8 x 60”	1
18	AWS0085	Hose Clamp, 8.25”	2
19	AWS0090	Transition Tube Support	1
20		1/2nc Locknut	1
21	AWS0153	Saddle, With Stud	1
22	AWS0087	Transition Tube (Incl. Item 23)	1
23	AWS0782	Decal, Logo 24x4	1

End Cap and Lock Sleeve

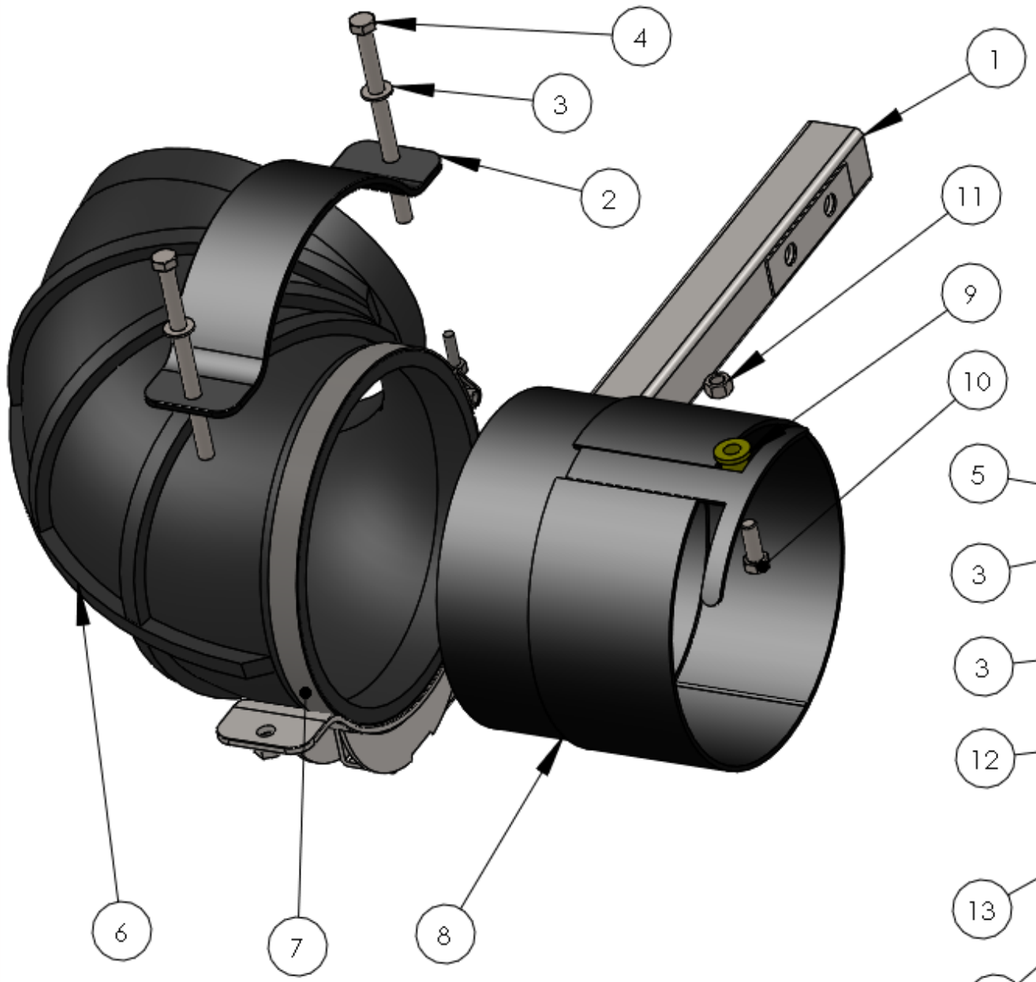

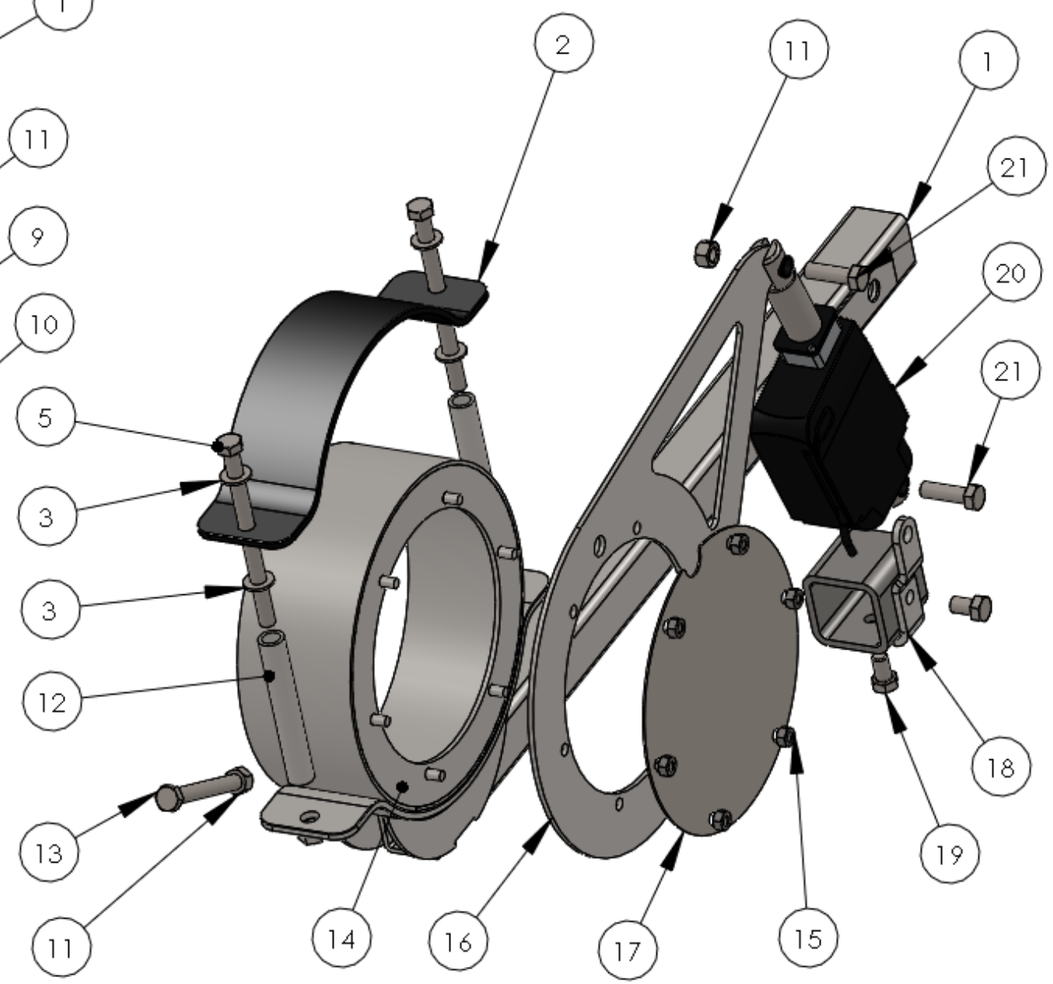

Item #	Part #	Description	Qty.
1	AWS0102	Manifold Arm	2
2	AWS0123	Saddle Clamp	2
3		Washer, 3/8	6
4		Bolt, 3/8ncX 5-1/2, gr8	2
5		Bolt, 3/8nc X 5, gr8	2
6	AWS0091	Elbow, 90	1
7	AWS0086	Hose Clamp, 8.75”	1
8	AWS0092	Lock Sleeve	1
9	AWS0512	Bushing, Shoulder	1
10		Bolt, 3/8nc x 1	1
11		Locknut, 3/8nc	4
12	AWS0479	Spacer, End Cap	2
13		Bolt, 3/8nc x 3	1
14	AWS0810	End Cap Base	1
15		Flange Nut, 1/4nc	6
16	AWS0811	End Cap Arm	1
17	AWS0813	End Cap Plate, 6 bolt	1
18	AWS0103	Actuator Pivot	1
19		Bolt, 3/8nf x 5/8	2
20	AWS0546	Actuator, Manifold Tilt	1
21	AWS0514	Actuator Bolt	2

AWS0814 End Cap Assembly, w/ lever includes items 11,13,14,15,16,17
and replaces AWS0094 End Cap (-2015)

Mount Arms

to 2019

Item #	Part #	Description	Qty.
1	AWS0513	Mount Arm Assy. (Incl 1-11) Specify Side	1
2	AWS0459	Spacer, 1/2” x 2”	1
3	AWS0538	Roller, 1-7/8”	1
4		Bolt, 1/2” x 3”	4
5		Bolt, 1/2” x 2-1/2”	1
6		Bolt, 3/8” x 2-1/2”	1
7		Stover Lock Nut, 1/2”	5
8		Stover Lock Nut, 3/8”	1
9		Bolt, 3/8” nc x 1”	1

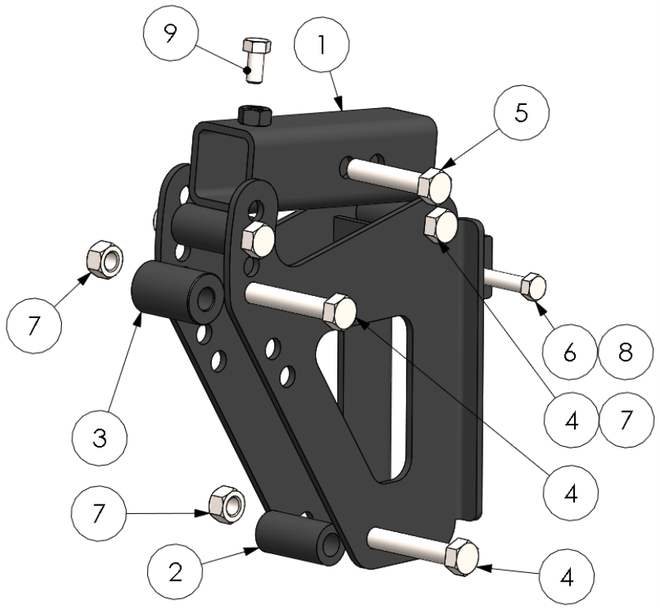

2020 & Up

Item #	Part #	Description	Qty.
1	AWS1051	Mount Arm Assy (Incl 2-9) Specify Side	1
2	AWS0459	Spacer, 1/2” x 2”	1
3	AWS0538	Roller, 1-7/8”	1
4		Bolt, 1/2” x 3”	4
5		Bolt, 1/2” x 2-1/2”	1
6		Bolt, 3/8” x 2-1/2”	1
7		Stover Lock Nut, 1/2”	5
8		Stover Lock Nut, 3/8”	1
9		Bolt, 3/8” nc x 1”	1

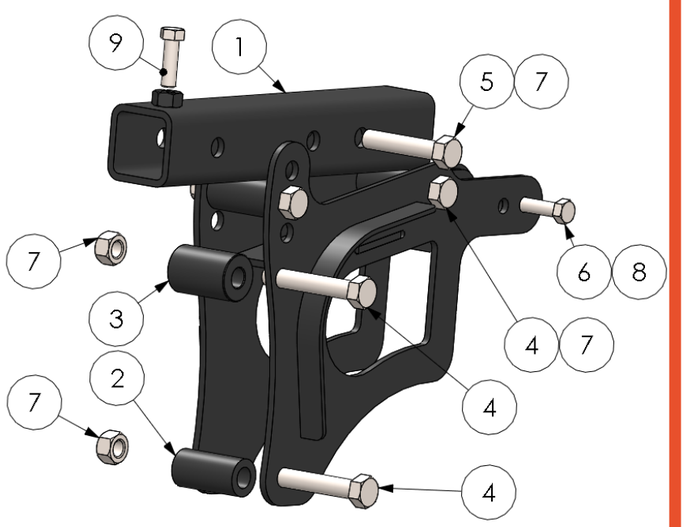

Left side shown
Reverse bolts for right hand

Cable Kit Assembly

35’ Header Only

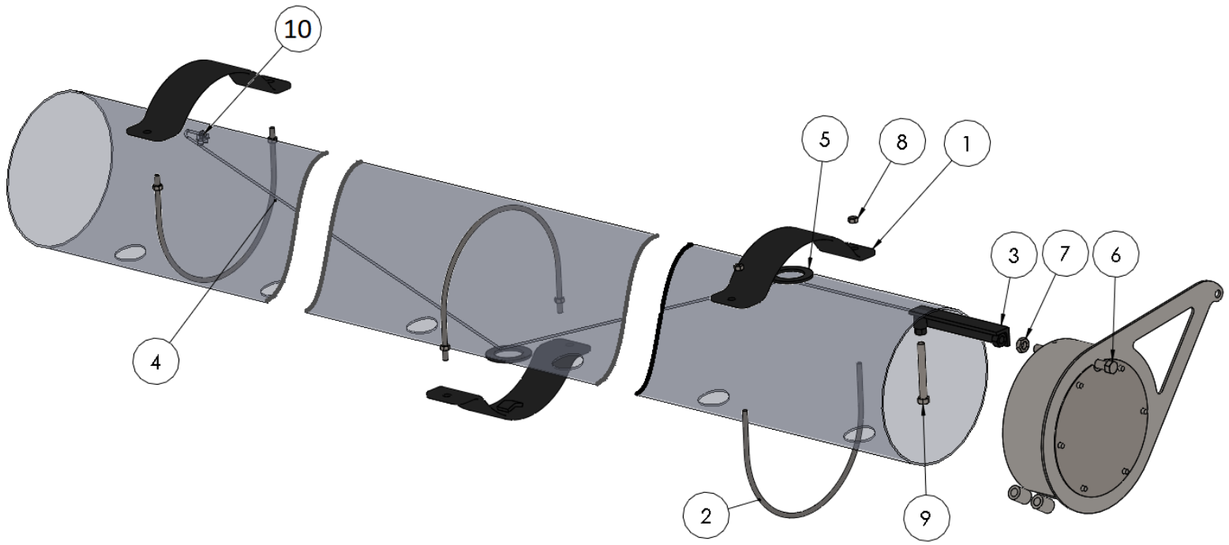

Item #	Part #	Description	Qty.
	AWS0430	Cable Kit (Incl. Items 1-10)	
1	AWS0435	Saddle, Cable Support	3
2	AWS0163	8” U- Bolt (Incl. Item 8)	3
3	AWS0433	Cable Tensioner	1
4	AWS0427	1/8” Steel Cable (per ft.)	+35 ft
5	AWS0015	7/16” nc x 5” Hex Bolt	1
6	AWS0116	Gasket	3
7	AWS0016	7/16” nc Jam Nut	1
8		¼”nc Nyloc Nut	6
9		3/8”nc x 3” Hex Bolt	1
10		Cable U-Clamp	1

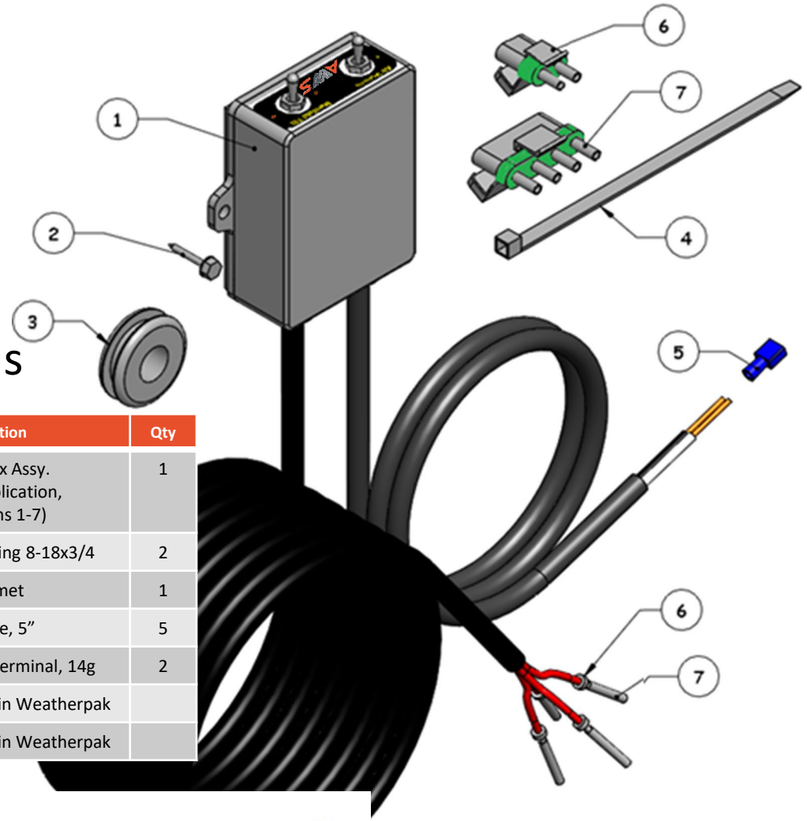

Dual Switch Controls

Item #	Part #	Description	Qty
1	AWS0422	Switch Box Assy. Specify Application, (Incl. Items 1-7)	1
2	HDTHE2ZI81812	Screw, Self Drilling 8-18x3/4	2
3	HNYGR51634116	Grommet	1
4	AWS0264	Cable Tie, 5”	5
5	AWS0402	Female Spade Terminal, 14g	2
6	AWS0097K	Terminal Kit – 2 Pin Weatherpak	
7	AWS0320K	Terminal Kit – 4 Pin Weatherpak	

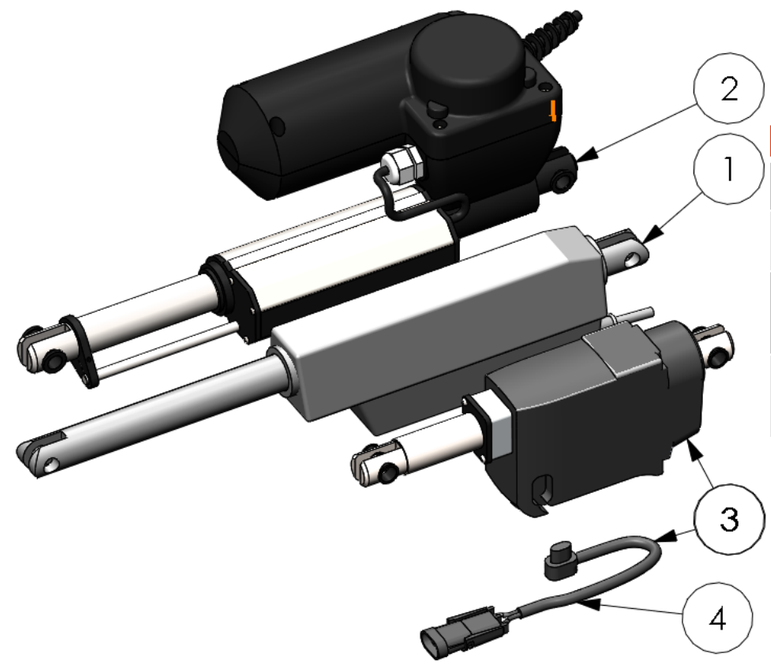

Actuators

Item #	Part #	Description	Qty
1	AWS0095	Actuator, Fan Control LA12	1
2	Call AWS	Actuator, Manifold Tilt LA30 Single Manifold -2014	1
3	AWS0546	Actuator, Manifold Tilt LA23 Single Manifold 2014- (Incl. Item 4)	1
4	AWS0546B	Actuator Harness LA23 (Incl. Clip & Connector, Fits Item 4 only)	1

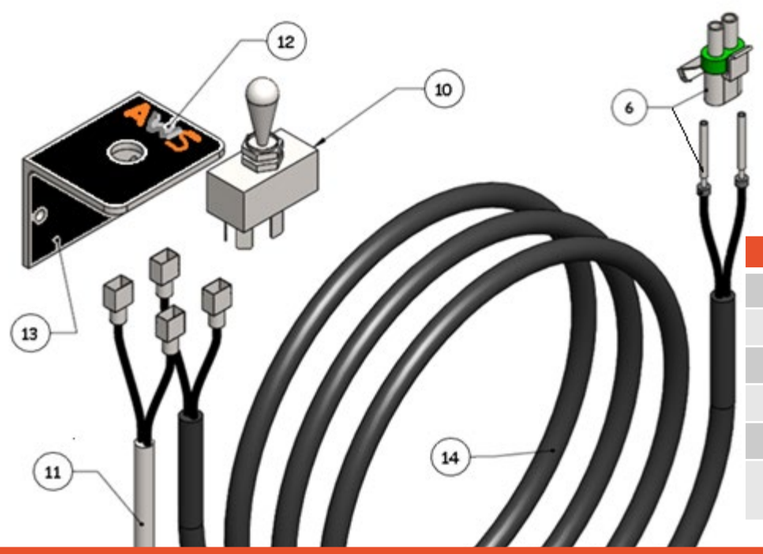

Single Switch Controls

Item #	Part #	Description	Qty
10	AWS0385	Switch, DPDT Crossover	1
11		Power Lead, Specify Application	1
12	AWS0066	Decal, Switch Bracket	1
13	AWS0386	Switch Bracket (Incl. Item 12)	1
14	AWS0099	Combine Harness, Single 20’	1
	AWS0385K	**Single Switch Kit, (Incl. Items 10-14)**	

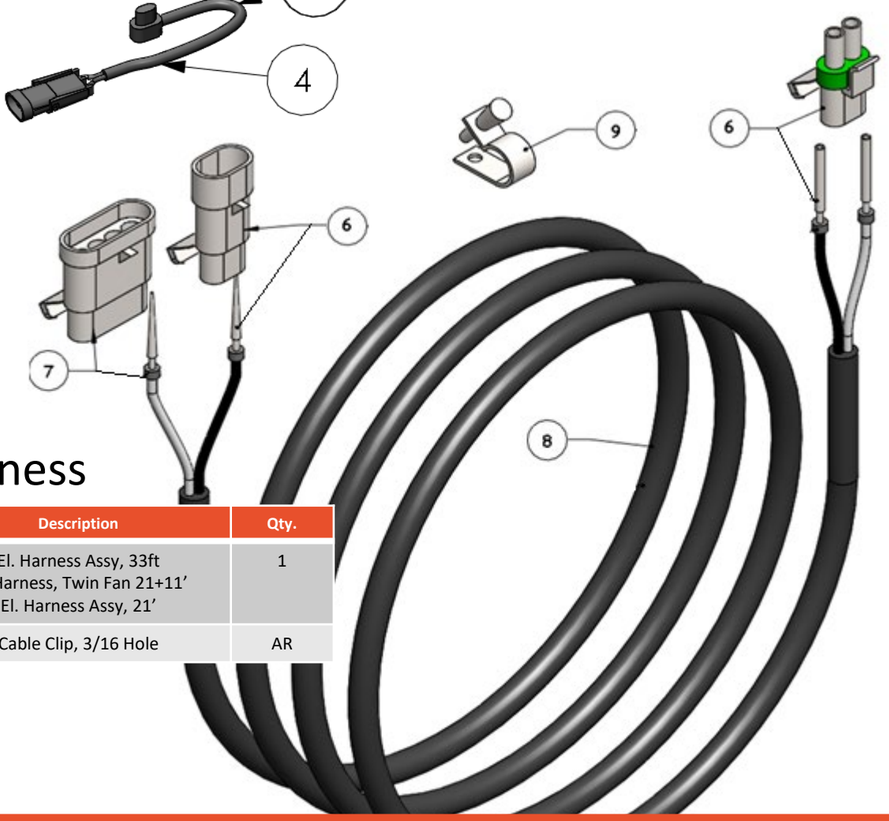

Header Harness

Item #	Part #	Description	Qty.
8	AWS0100 AWS0101 AWS0580	El. Harness Assy, 33ft El. Harness, Twin Fan 21+11’ El. Harness Assy, 21’	1
9	AWS0263	Cable Clip, 3/16 Hole	AR

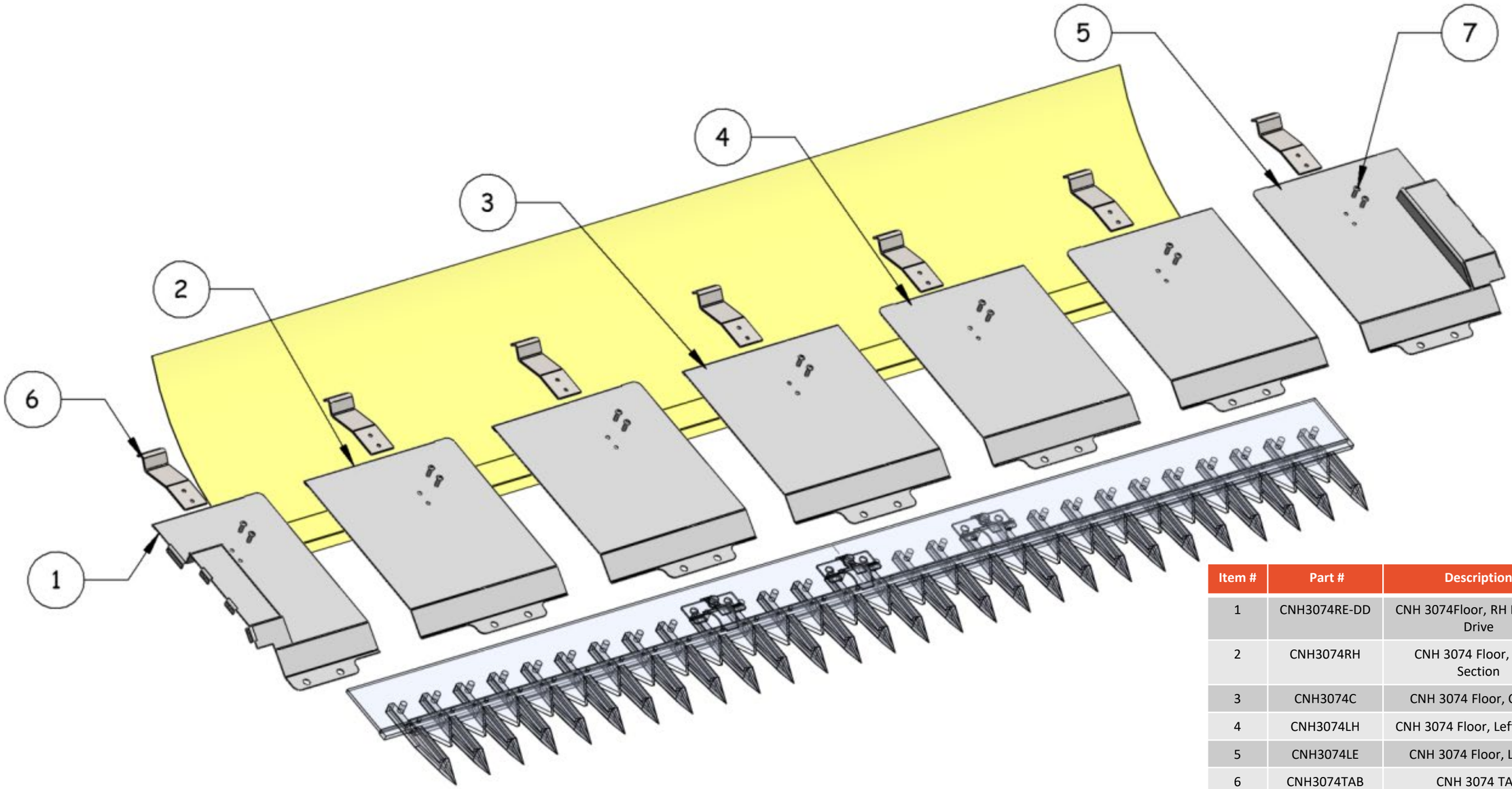

Item #	Part #	Description	Qty.
1	CNH3074RE-DD	CNH 3074Floor, RH End Dual Drive	1
2	CNH3074RH	CNH 3074 Floor, Right Section	AR
3	CNH3074C	CNH 3074 Floor, Center	1
4	CNH3074LH	CNH 3074 Floor, Left Section	AR
5	CNH3074LE	CNH 3074 Floor, LH End	1
6	CNH3074TAB	CNH 3074 TAB	AR
7		Screw, ¼" x ¾"	AR
	CNH3074-20DD CNH3074-25DD CNH3074-30DD CNH3074-35DD	Floor Kit, 20' Dual Drive Floor Kit, 25' Dual Drive Floor Kit, 30' Dual Drive Floor Kit, 35' Dual Drive	