AWS PARTS BOOK

New Holland 740cf DD Models

Version 20180509

Parts Order Information

Contact Info:

TEMP Farm Equipment Ltd.
3890 Wellington St. Box 269
Mitchell, Ontario, Canada
N0K-1N0
Phone: 1-877-348-0066 or 519-348-0066
Fax: 519-348-0061

Parts: Craig Rock craigrock@awsairbar.com
Sales: Jeff Dolmage jdolmage@awsairbar.com
Sales: Carmen Drost cdrost@awsairbar.com
Development: Mike DeCorte mdecorte@awsairbar.com
Accounting: Ryan Yoanidis admin@awsairrbar.com
Service: Dave Miller dmiller@awsairbar.com

Terms and Conditions:

1. All goods are F.O.B Mitchell, Ontario, Canada or Minot, ND USA
2. All Parts include 30 day warranty of defects.
3. Please indicate preferred shipment method with order

   Typical:

US:*	Via UPS ground collect
Western Canada:	Via DHL ground collect
Ontario:	Cardinal Couriers Collect

   *Western US Orders: Shipped from Agrabase warehouse in Minot, ND via Speedy Couriers. Freight, Including warehouse fee is prepaid and invoiced.
4. Returns accepted within 12 months of purchase, must be unused and are subject to a 10% handling fee. They must be shipped back to AWS prepaid with prior authorization.

Table of Contents

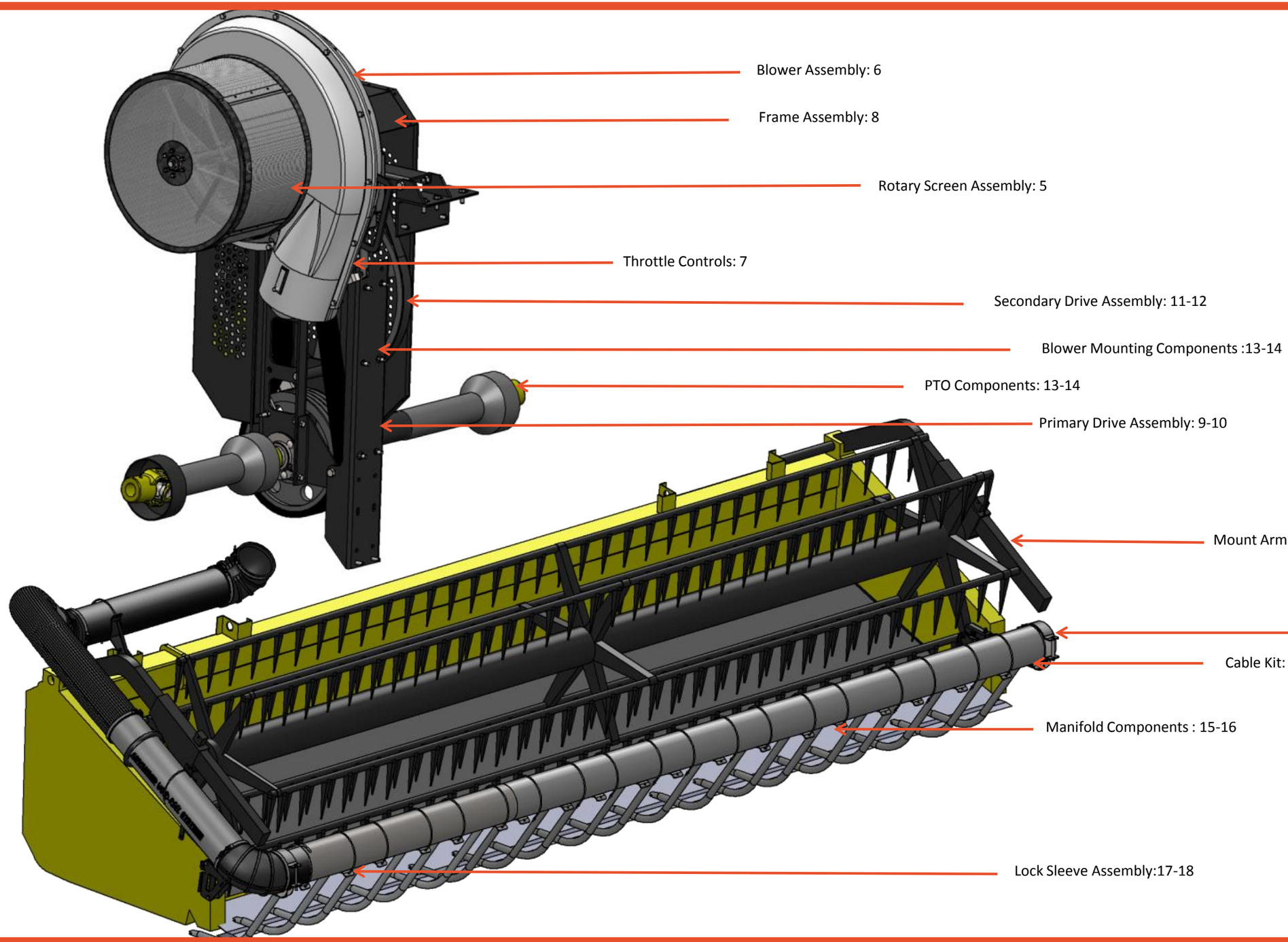

*Electric Controls: 21-22
* Floor Kit: 23-24

Rotary Screen Assembly

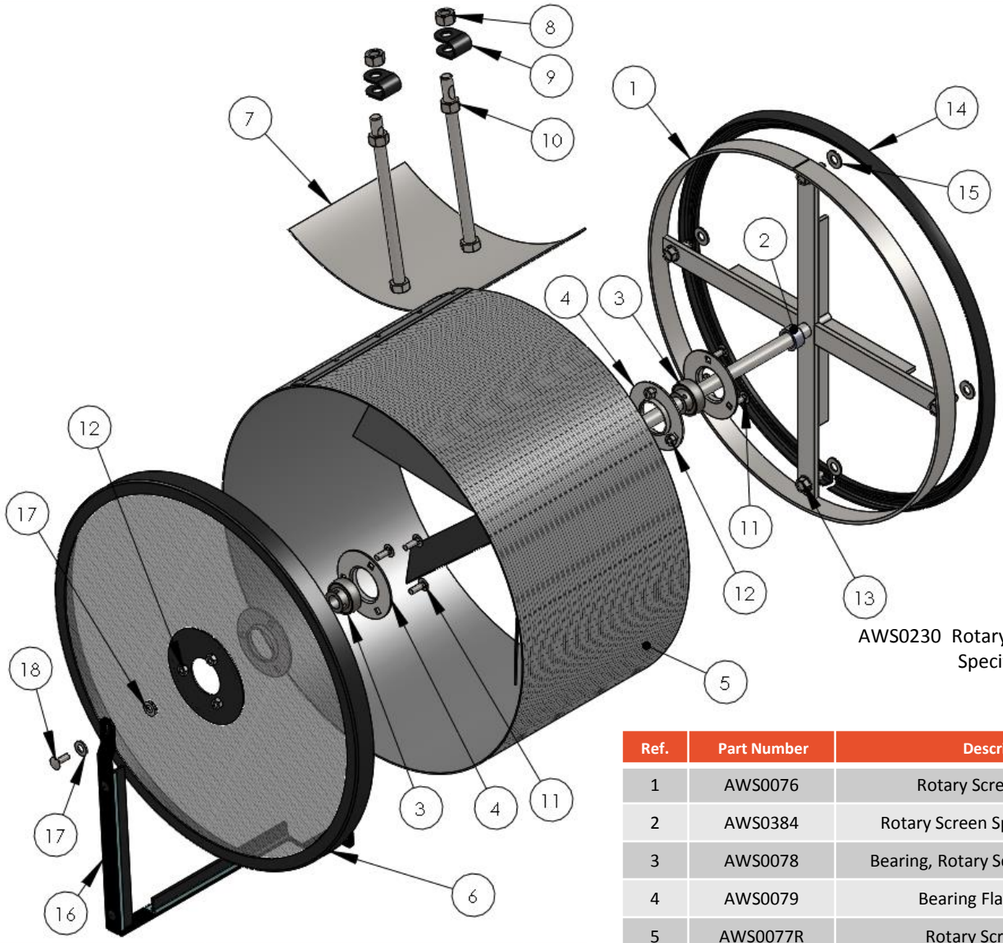

AWS0230 Rotary Screen Assy.
Specify Application

Ref.	Part Number	Description	Qty.
11	AWS0088	Rotary Screen Seal	Opt
12	HSAZI38	Washer, 3/8 Flat	4
13	AWS0082	Clevis	2
14	HLNSTACZI1213	1/2 nc Lock Nut	4
15	HSAZ12	Washer, ½ Flat	4
16	AWS0088	Rotary Screen Brush Assy	1
17	HSAZ516	Washer, 5/16 Flat	AR
18	HBHCSS142034	1/4nc x3/4 Button Head Cap, Stainless	1

Ref.	Part Number	Description	Qty.
1	AWS0076	Rotary Screen Support	1
2	AWS0384	Rotary Screen Spacer, 3/4 x 1/2	1
3	AWS0078	Bearing, Rotary Screen, AS202-101	2
4	AWS0079	Bearing Flange, PF203	4
5	AWS0077R	Rotary Screen, Right	1
6	AWS0081	Clean Out Plate	1
7	AWS0080	Rotary Screen Cap	1
8	HCAG5ZI142034	Bolt, 1/4nc x 3/4 Carriage	6
9	HLNSTACZI1420	Nut, 1/4 nc Nylock	6
10	HTCHWZI38161	Bolt 3/8 nc x 1 Self Tapping	4

Blower Assembly

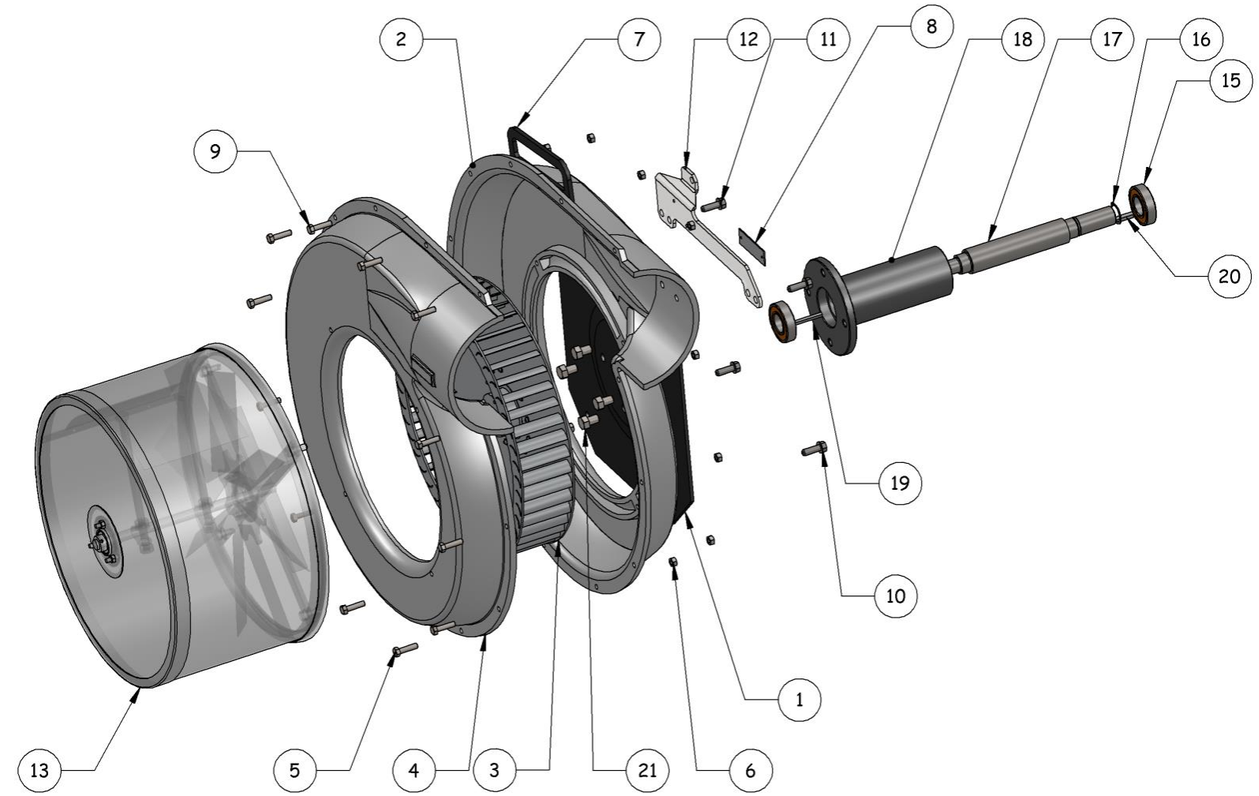

Ref.	Part Number	Description	Qty.
1	AWS0067	Fan Plate	1
2	AWS0068	Fan Housing, LH	1
3	AWS0071	Impeller, Right Hand H7/8 Hub (Included with Impeller)	1 1
4	AWS0069	Fan Housing, RH	1
5		Bolt, 5/16nc x 1-1/4	10
6		Nut, 5/16nc Nylock	12
7	AWS0157	Lift Hook	1
8	AWS0065	Serial Number Plate	1
9		Bolt, 5/16nc x 1-1/2 (Bolts for Hook)	2
10		Bolt, 3/8nc x 1 Self Tapping Flange	2

Ref.	Part Number	Description	Qty.
11		Bolt, 3/8nc x 1-1/4	2
12	AWS0203	Actuator Mount See Page 7	1
13	AWS0230R	Rotary Screen Assembly, See Page 5	1
14			
15	AWS0037	Bearing, Fan Shaft 6206-2RSC3	2
16	AWS0036	Snap Ring, 1-1/8 EXT.	1
17	AWS0035	Fan Shaft, 14”	1
18	AWS0038	Fan Shaft Housing, 7.5”	1
19	AWS0073	Key, 3/16X1-1/2	1
20	AWS0034	Key, 1/4X2	1
21		Bolt, ½” nc x ¾”	4

Throttle Controls

Item #	Part #	Description	Qty.
1	AWS0114	Throttle Plate	1
2	AWS0231	Bolt, 10-32 Socket Head Cap	2
3	AWS0232	Nut, 10-32 SS Nyloc	2
4	AWS0212	Throttle Shaft, RH Electric	1
5	AWS0514	Bolt, Actuator	2
6	AWS0095	Actuator, Throttle Control	1
7	AWS0203	Actuactor Mount, RH	1
8		Bolt, 3/8ncX1-1/4	1
9	AWS0171	Stud, M10-1.50	1
10	AWS0170	Spring Washer	4
11		Washer, 3/8 Flat	3
12	AWS0172	Nut, M10-1.50Flange Nyloc	1
13	HFSC14201	Bolt, ¼" nc x 1" Flat Socket Cap	2
14	AWS0205	Actuator Link Guide	1
15	AWS0669	Decal, Actuator Indicator	1
16	AWS0204	Actuator Link	1

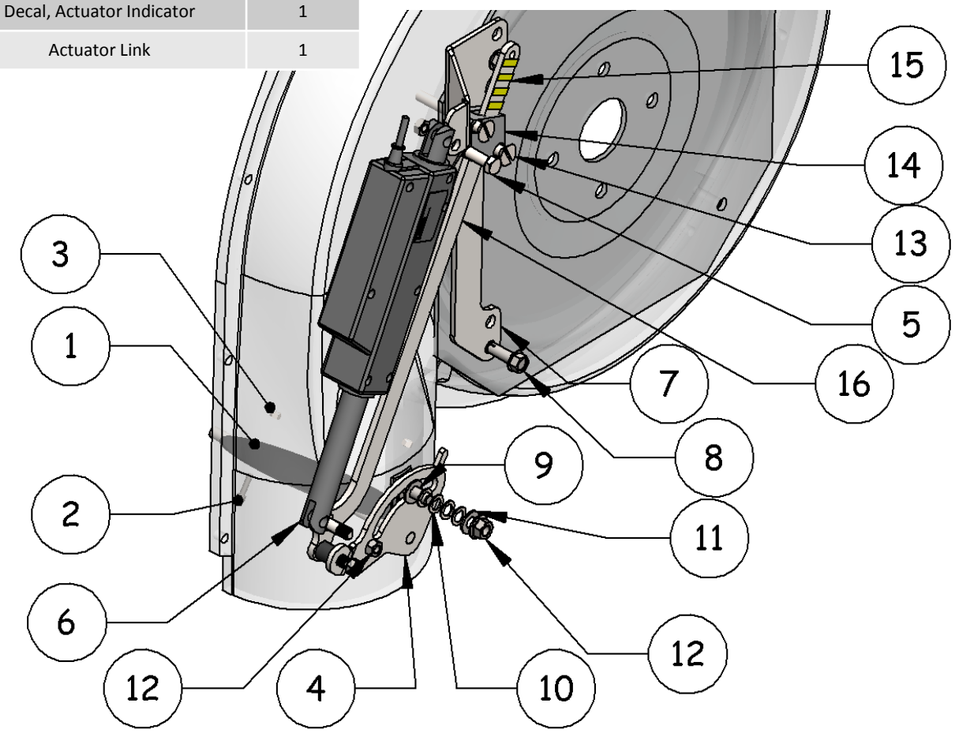

Frame Assembly

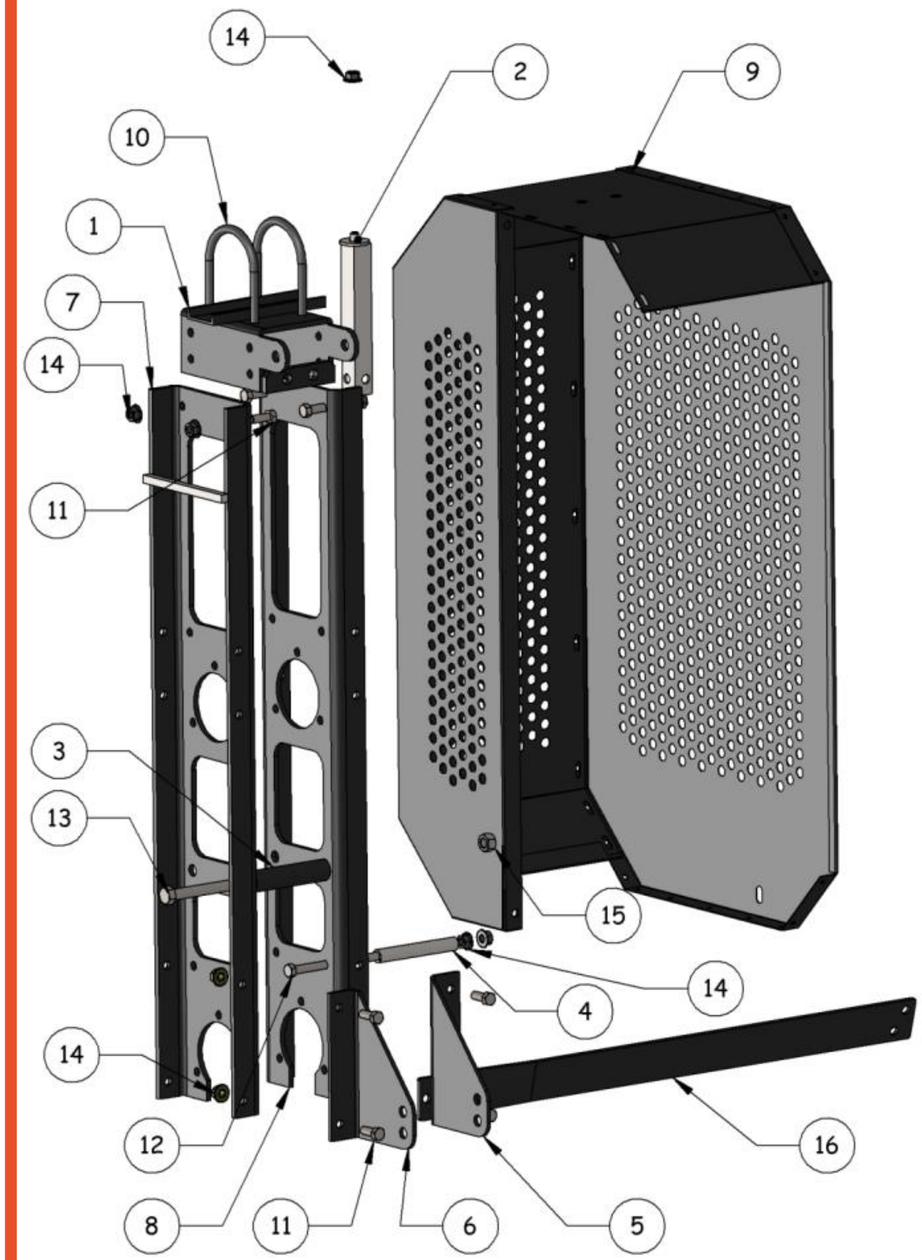

Description	Qty.
Top Bracket	1
Upper Shield Support	1
Spacer, ½ x 4-1/4	1
Spacer, Lower Shield	1
Frame Support, Left	1
Frame Support, Right	1
Frame Rail, Fan Side	1
Frame Rail, Drive Side	1
Shield Assembly, Left Hand	1
U-Bolt, 3/8nc x 3	2
Bolt, 3/8nc x 1	8
Bolt, 3/8nc x 5-1/2	1
Bolt, 1/2nc x 5-1/2	1
Nut, 3/8nc Serrated Flange	11
Nut, 1/2nc Stover Lock	1
CNH 3074 DD Brace	1

Primary Drive Assembly

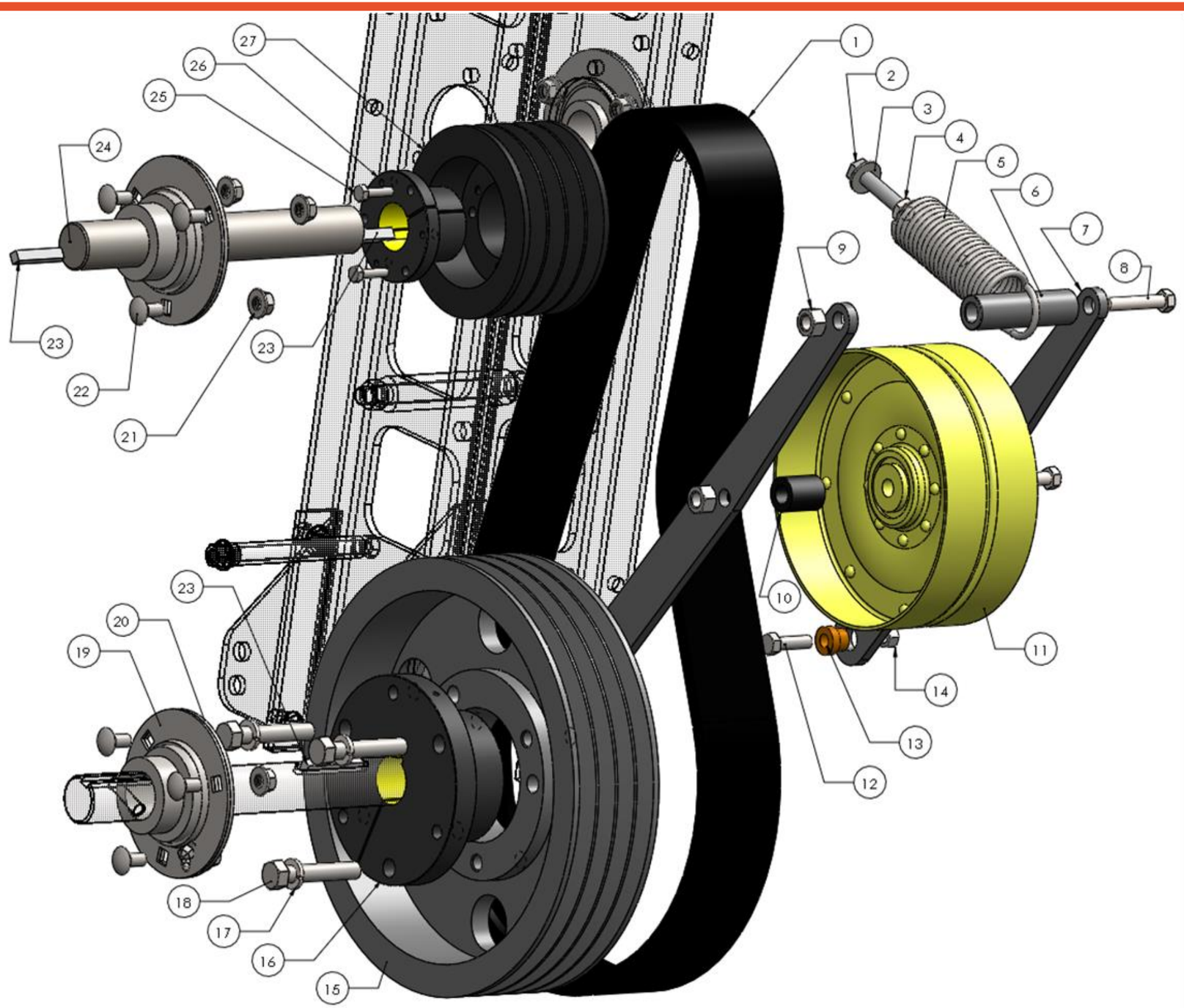

Item #	Part #	Description	Qty.
1	AWS0020	Belt, 5VX630-4	1
2	AWS0015	Bolt, 7/16ncX5 Tap	1
3		Flat Washer, 7/16	1
4	AWS0016	Jam Nut, 7/16nc	1
5	AWS0014	Spring, Extension	1
6	AWS0017	Spacer, 1/2X 3-1/2	1
7	AWS0013	Idler Arm, Primary	2
8		Bolt, 1/2ncX5	2
9		Nut, 1/2nc Stover Lock	2
10	AWS0018	Spacer, 1/2X1-3/16	2
11	AWS0012	Idler, HM Primary	1
12		Bolt, 3/8ncX1	2
13	AWS0512	Bushing, Bronze	2
14		Nut, 3/8nc Stover Lock	2
15	AWS0211	Sheave, 5VX12.5-4	1
16	AWS0008	Bushing E 1-3/8	1
17		Lock Washer, ½ (w/16)	3
18		Bolt, 1/2ncX2-1/2 Tap (w/16)	3
19	AWS0420	Bearing Flange, Greasable	4
20	AWS0001	Bearing Flange, PF207	4
21		Nut, 3/8nc Flange	12
22		Bolt, 3/8ncX3/4 Carriage	12
23	AWS0011	Key, 5/16 x 2	3
24	AWS0021	Shaft, Secondary HM	1
25		Bolt, 1/4ncX2 Tap (w/26)	3
26	AWS0022	Bushing, SD 1-3/8	1
27	AWS0024	Sheave, 5V5.50-4	1
28	AWS0003	Bearing, 1-3/8 w/ Collar	4

Secondary Drive Assembly

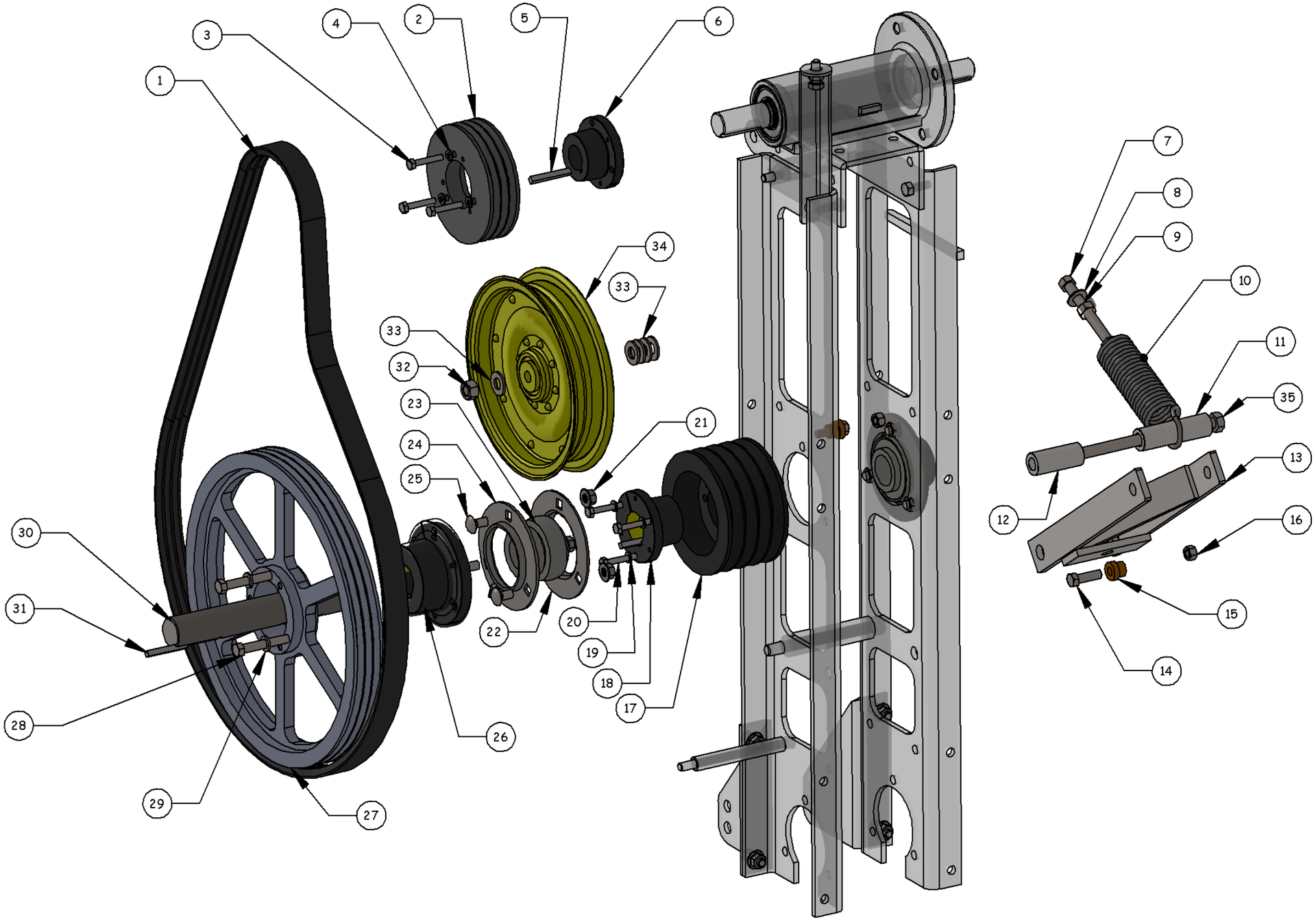

Item #	Part #	Description	Qty.
1	AWS0110	Belt, 3VX670-3	1
2	AWS0030	Sheave, 3VX4.75-3	1
3		Bolt, 1/4ncX1-1/2, Tap (w/6)	3
4		Lock Washer ¼ (w/6)	3
5	AWS0034	Key, 1/4X1-1/4	1
6	AWS0033	Bushing SDS 1-1/8	1
7	AWS0015	Bolt, 7/16ncX5 Tap	1
8		Flat Washer, 7/16	1
9	AWS0016	Jam Nut, 7/16	1
10	AWS0014	Spring, Extension	1
11	AWS0017	Spacer, 1/2X 3-1/2	1
12	AWS0459	Spacer, 1/2X 2	1
13	AWS0113	Idler Arm	1
14		Bolt, 3/8ncX1	2
15	AWS0512	Bushing, Bronze	2
16		Nut, 3/8nc Stover Lock	2
17	AWS0024	Sheave, 5VX5.50-4	1
18	AWS0022	Bushing, SD 1-3/8	1
19		Lock Washer ¼ (w18)	3
20		Bolt , 1/4ncX2 Tap (w18)	3
21		Nut, 3/8nc Flange	6
22	AWS0001	Bearing Flange, PF207	2
23	AWS0003	Bearing, 1-3/8 Wide Race w/ Collar	2
24	AWS0420	Bearing Flange, Greasable	2
25		Bolt, 3/8nc X3/4 Carriage	6
26	AWS0028	Bushing, SF 1-3/8	1
27	AWS0027	Sheave, 3VX14.0-3	1
28		Bolt, 3/8ncX2-1/2 (w/26)	3
29		Lock Washer, 3/8 (w/26)	3
30	AWS0021	Shaft, Secondary	1
31	AWS0011	Key, 5/16X2	2
32		Nut, 1/2nc Stover Lock	1
33		Flat Washer, ½	A/R
34	AWS0119	Idler, 8”	1
35		Bolt, 1/2 nc x 8-1/2	1

Mounting and Drive Components

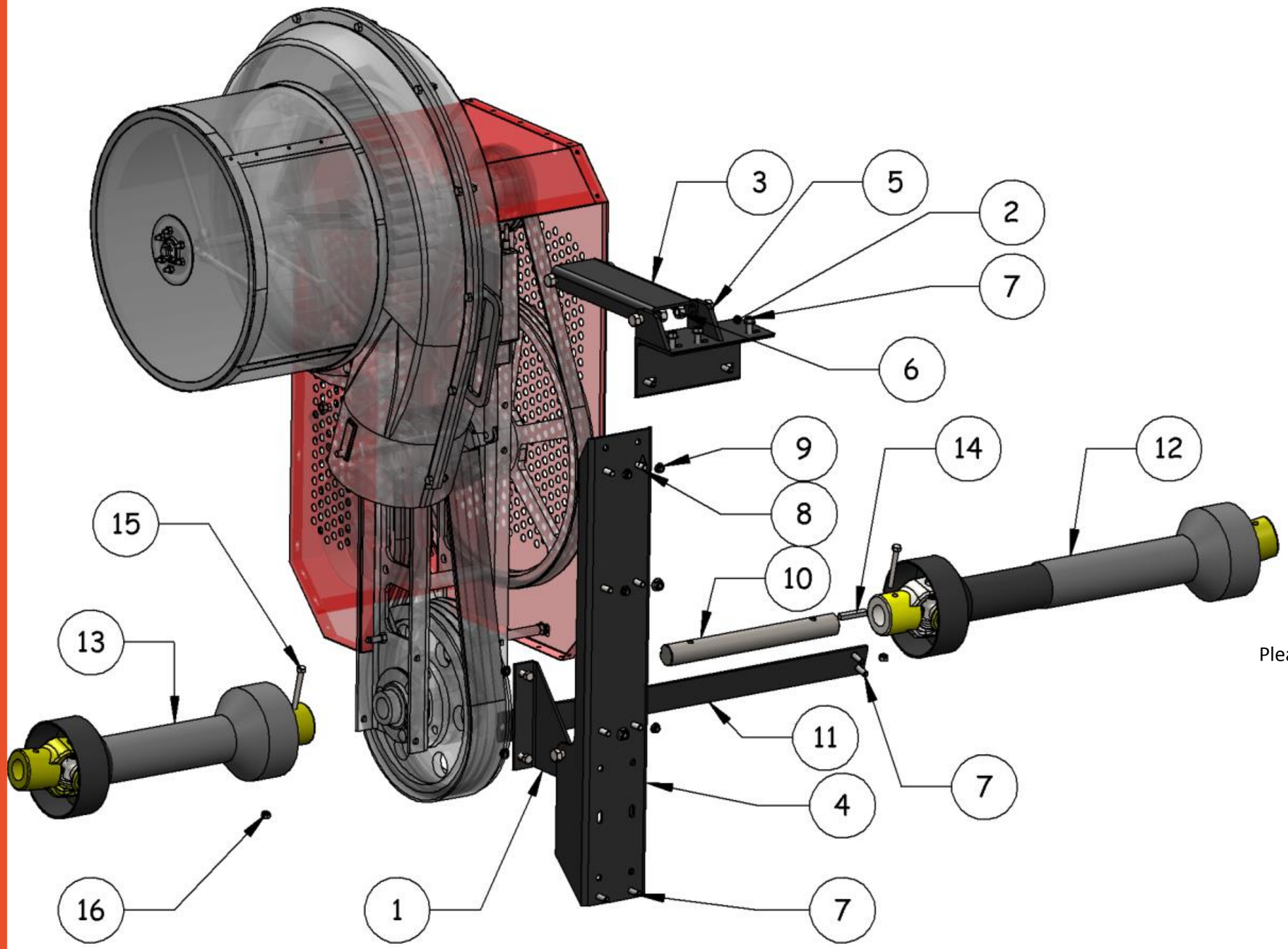

Item #	Part #	Description	Qty.
1	AWS0306 AWS0307	Frame Support, LH Frame Support, RH	1 1
2	AWS0480	CNH Top Link Bracket	1
3	AWS0424	Top Link, 14”	1
4	AWS0407	Universal Bracket, Channel	1
5		1/2” nc x 1” Hex Bolt	6
6		1/2” nc Stover Lock Nut	6
7		3/8” nc x 1” Hex Flange Self Tapping	7
8		3/8” nc x 1” Hex Bolt	10
9		3/8” nc Flange Nut	10
10	AWS0670	Shaft, CNH 3074 Dual Drive	1
11	AWS0665	CNH 3074DD Brace	1
12	AWS0864 AWS0452 AWS0449 AWS0454	PTO Assy. 6sp QR - 1-3/8”rb, 26.5 Star PTO Yoke, 6sp QR PTO Yoke, 1-1/8 Hex QR PTO Cross Bearing Kit, W2400	1
13	AWS0862	PTO Assy. 6sp QR – 1-3/8rb, 24” L	1
14	AWSW0011	Key, 5/16” x 2”	2
15		Bolt, 5/16” x 2-3/4”	2
16		5/16” nc Lock Nut	2

Please Call for PTO Parts

Manifold Components

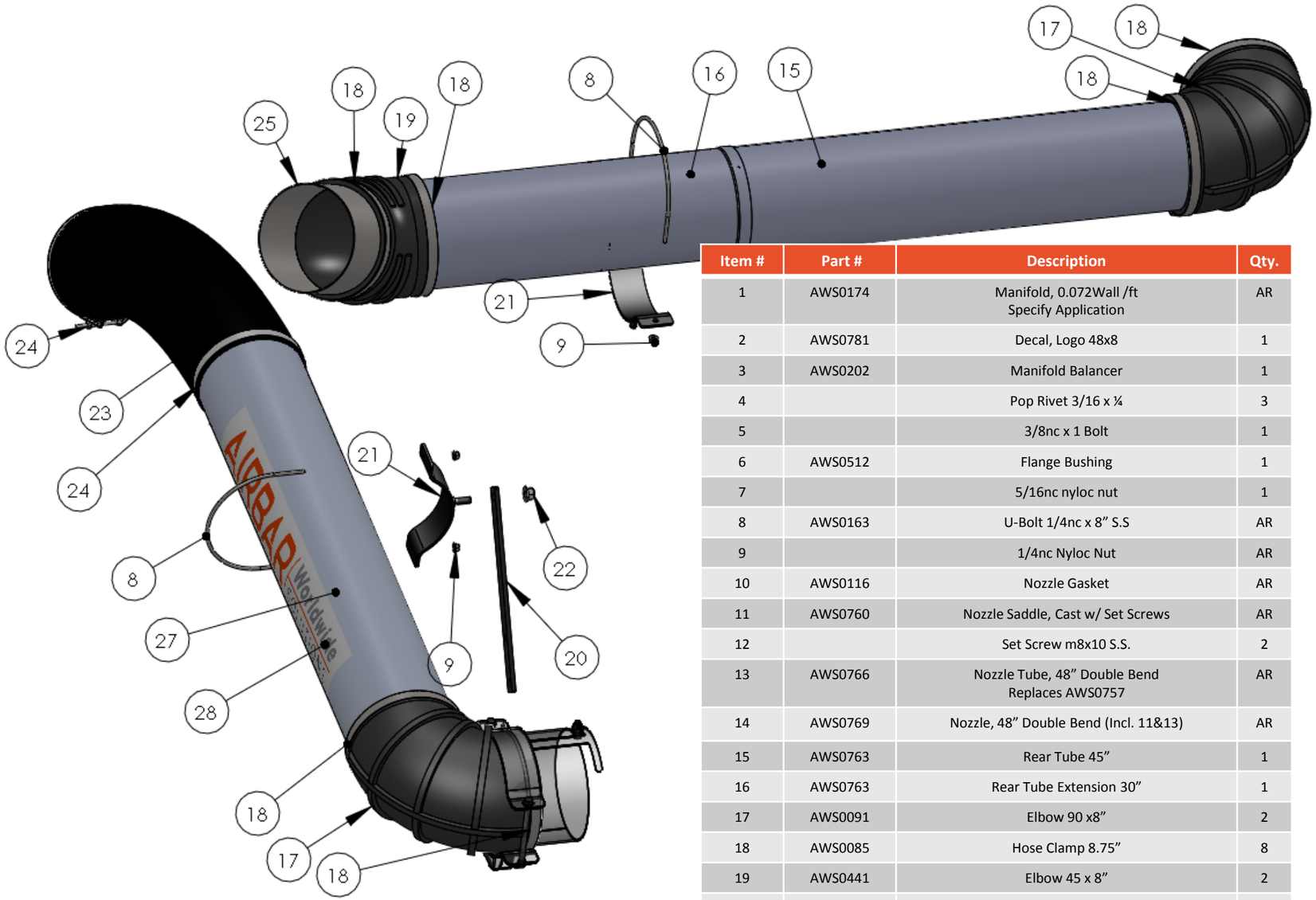

Item #	Part #	Description	Qty.
1	AWS0174	Manifold, 0.072Wall /ft Specify Application	AR
2	AWS0781	Decal, Logo 48x8	1
3	AWS0202	Manifold Balancer	1
4		Pop Rivet 3/16 x ¼	3
5		3/8nc x 1 Bolt	1
6	AWS0512	Flange Bushing	1
7		5/16nc nyloc nut	1
8	AWS0163	U-Bolt 1/4nc x 8” S.S	AR
9		1/4nc Nyloc Nut	AR
10	AWS0116	Nozzle Gasket	AR
11	AWS0760	Nozzle Saddle, Cast w/ Set Screws	AR
12		Set Screw m8x10 S.S.	2
13	AWS0766	Nozzle Tube, 48” Double Bend Replaces AWS0757	AR
14	AWS0769	Nozzle, 48” Double Bend (Incl. 11&13)	AR
15	AWS0763	Rear Tube 45”	1
16	AWS0763	Rear Tube Extension 30”	1
17	AWS0091	Elbow 90 x8”	2
18	AWS0085	Hose Clamp 8.75”	8
19	AWS0441	Elbow 45 x 8”	2
20	AWS0090	Transition Tube Support	1
21	AWS0153	Saddle, With Stud	2
22		1/2nc Lock Nut	AR
23	AWS0410	Flex Hose, 60”	1
24	AWS0086	Hose Clamp. 8.25	2
25	AWS0160	Connector Pipe 6”	1

Note: Manifold Balancer placed 1/3 way down manifold from blower.

End Cap and Lock Sleeve

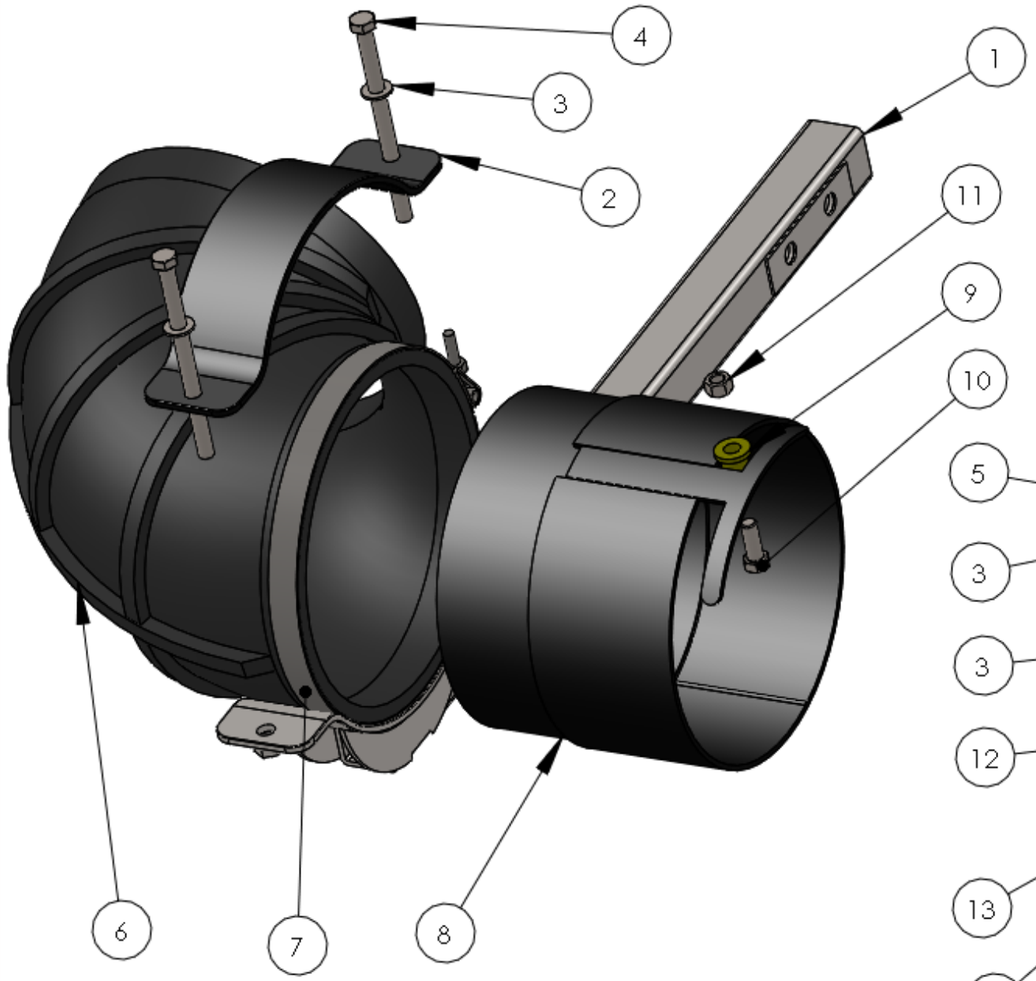

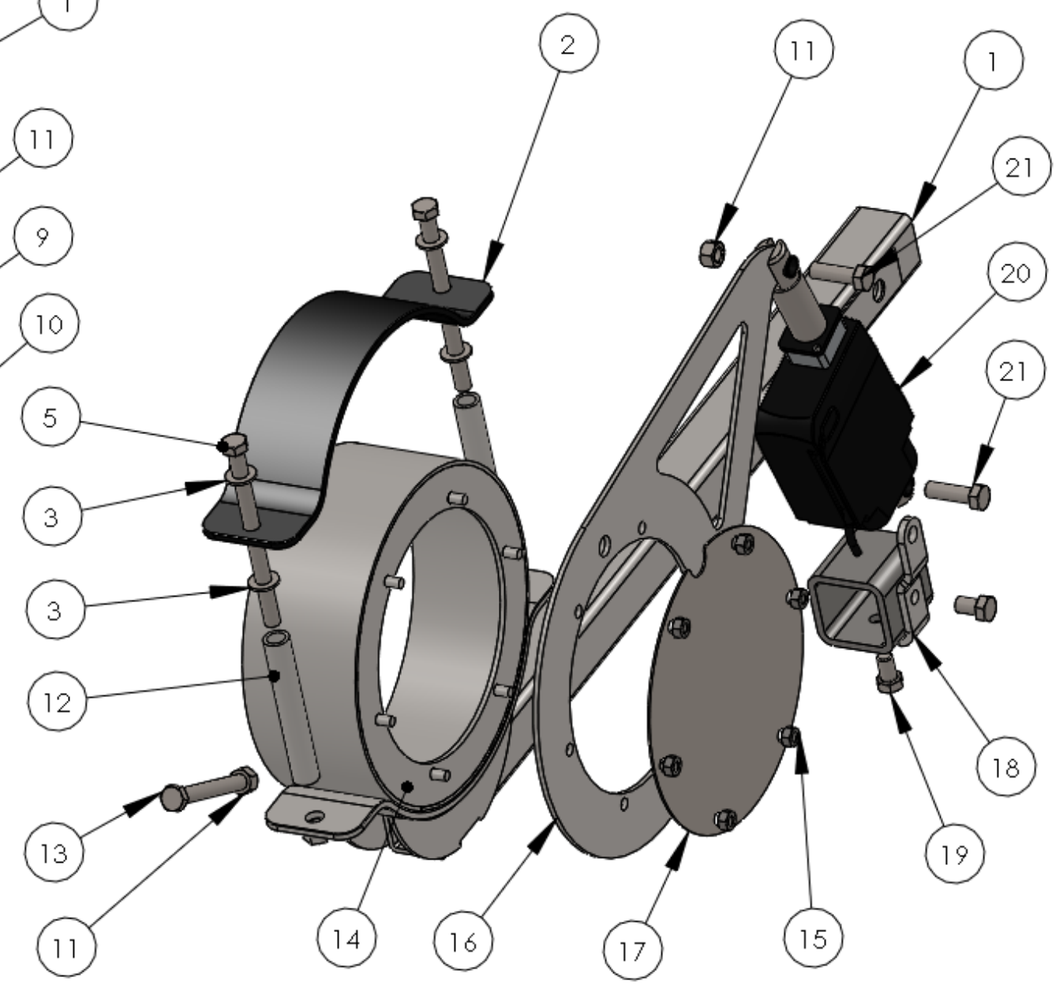

Item #	Part #	Description	Qty.
1	AWS0102	Manifold Arm	2
2	AWS0123	Saddle Clamp	2
3		Washer, 3/8	6
4		Bolt, 3/8ncX 5-1/2, gr8	2
5		Bolt, 3/8nc X 5, gr8	2
6	AWS0091	Elbow, 90	1
7	AWS0086	Hose Clamp, 8.75”	1
8	AWS0092	Lock Sleeve	1
9	AWS0512	Bushing, Shoulder	1
		Bolt, 3/8nc x 1	1
11		Locknut, 3/8nc	4
12	AWS0479	Spacer, End Cap	2
13		Bolt, 3/8nc x 3	1
14	AWS0810	End Cap Base	1
15		Flange Nut, 1/4nc	6
16	AWS0811	End Cap Arm	1
17	AWS0813	End Cap Plate, 6 bolt	1
18	AWS0103	Actuator Pivot	1
19		Bolt, 3/8nc x 5/8	2
20	AWS0546	Actuator, LS23	1
21	AWS0514	Actuator Bolt	2

AWS0814 End Cap Assembly, w/ lever includes items 11,13,14,15,16,17
and replaces AWS0094 End Cap (-2015)

Mount Arms

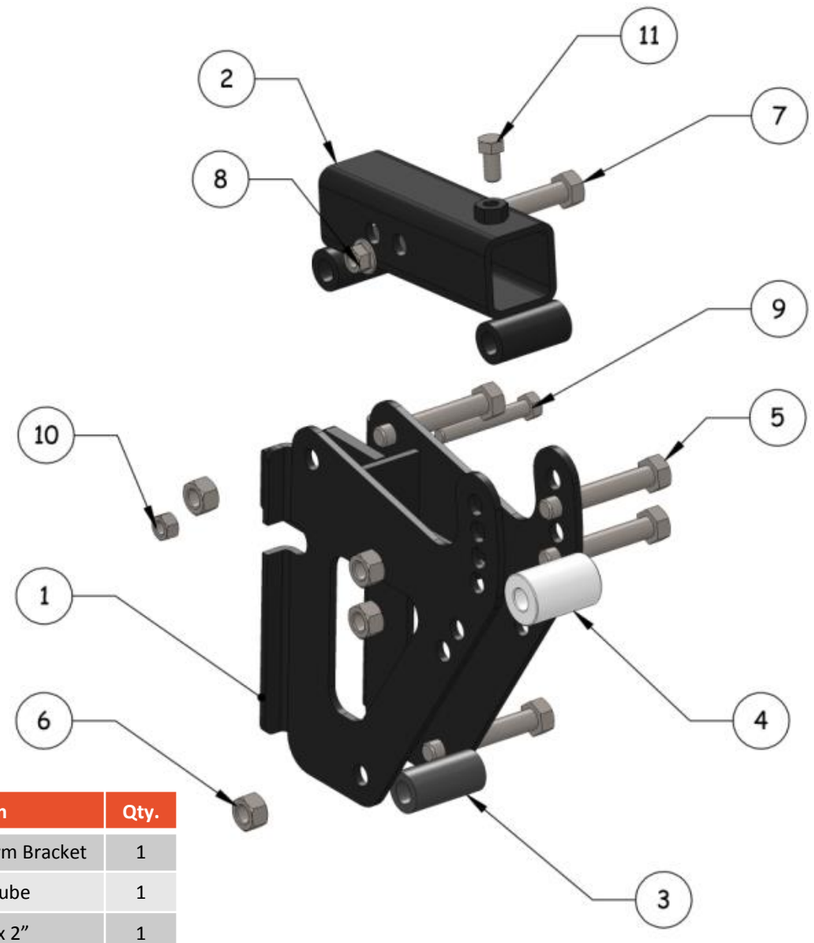

Item #	Part #	Description	Qty.
1	AWS0507	CNH 3074 Mount Arm Bracket	1
2	AWS0487	Mount Arm Tube	1
3	AWS0459	Spacer, 1/2” x 2”	1
4	AWS0538	Roller, 1-7/8”	1
5		Bolt, 1/2” x 3”	4
6		Stover Lock Nut, 1/2”	4
7		Bolt, 1/2” x 2-1/2”	1
8		Flange Hex Nut, 1/2”	1
9		Bolt, 3/8” x 2-1/2”	1
10		Stover Lock Nut, 3/8”	1
11		Bolt, 3/8” nc x 1”	1
	AWS0513	Mount Arm Assy. Specify Side	

Left side shown
Reverse bolts for right hand

Cable Kit Assembly

35’ Header Only

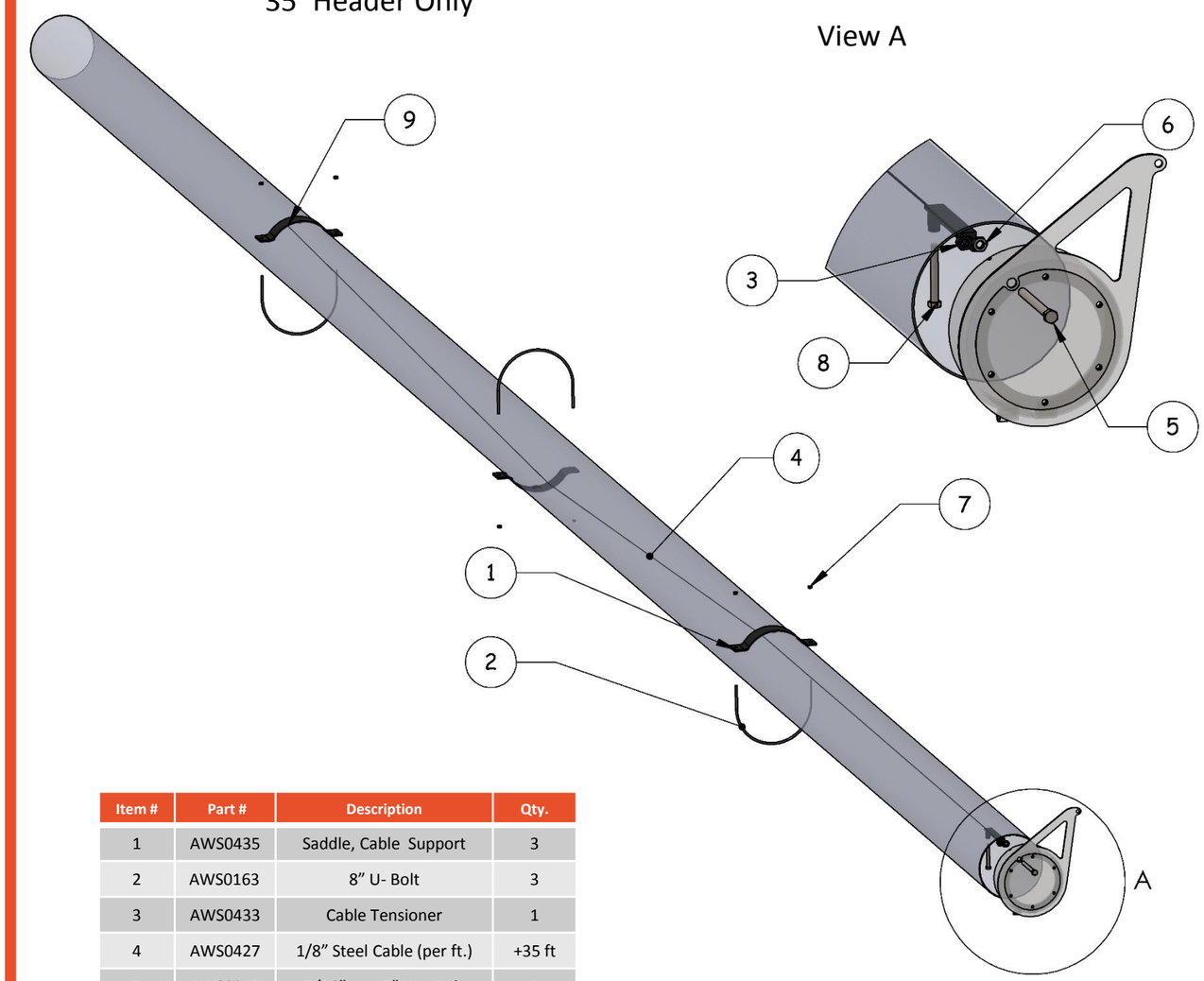

Item #	Part #	Description	Qty.
1	AWS0435	Saddle, Cable Support	3
2	AWS0163	8” U- Bolt	3
3	AWS0433	Cable Tensioner	1
4	AWS0427	1/8” Steel Cable (per ft.)	+35 ft
5	AWS0015	7/16” nc x 5” Hex Bolt	1
6	AWS0016	7/16” nc Jam Nut	1
7		¼”nc Nyloc Nut	6
8		3/8”nc x 3” Hex Bolt	1
9		Cable U-Clamp	1

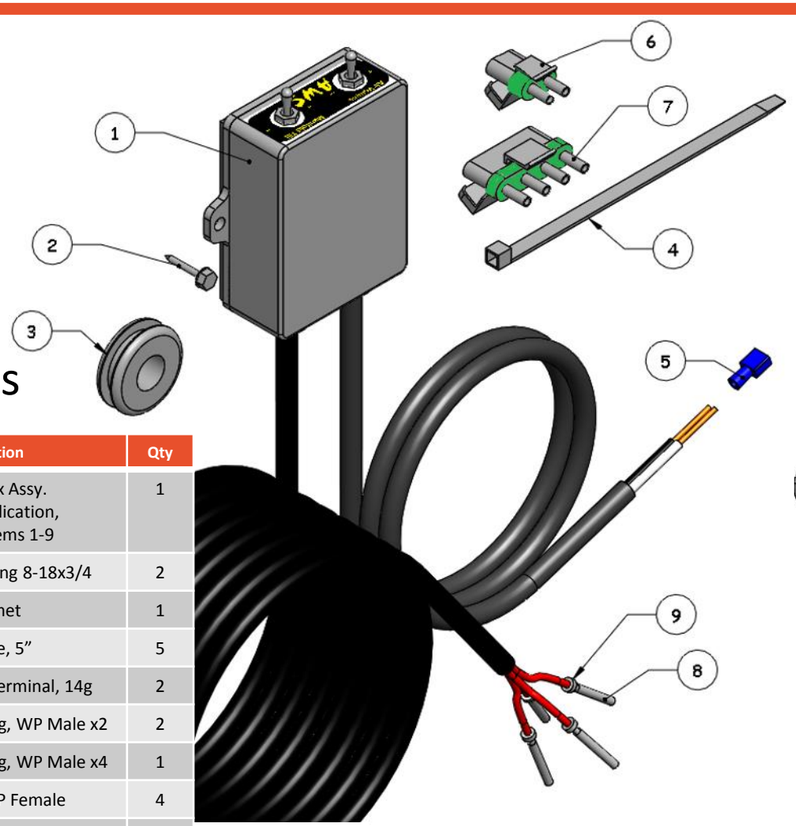

Dual Switch Controls

Item #	Part #	Description	Qty
1	AWS0422	Switch Box Assy. Specify Application, Includes Items 1-9	1
2	HDTHE2ZI81812	Screw, Self Drilling 8-18x3/4	2
3	HNYGR51634116	Grommet	1
4	AWS0264	Cable Tie, 5”	5
5	AWS0402	Female Spade Terminal, 14g	2
6	AWS0098	Connector Housing, WP Male x2	2
7	AWS0320	Connector Housing, WP Male x4	1
8	AWS0348	Terminal, WP Female	4
9	AWS0349	Terminal Seal, WP Grey	4

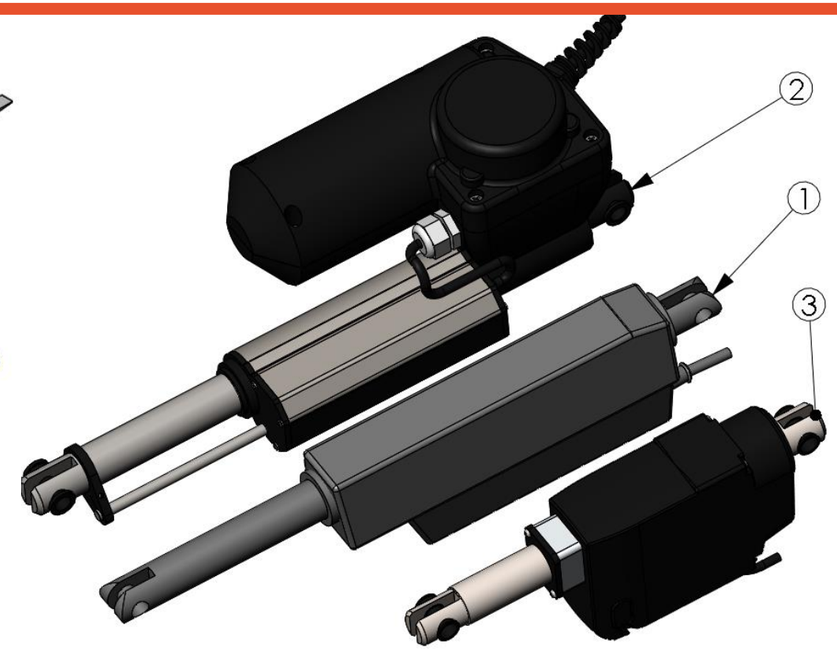

Actuators

Item #	Part #	Description	Qty
1	AWS0095	Actuator, Fan Control LA12	1
2	AWS0191	Actuator, Manifold Tilt LA30 Single Manifold -2014	1
3	AWS0546	Actuator, Manifold Tilt LA23 Single Manifold 2014-	1

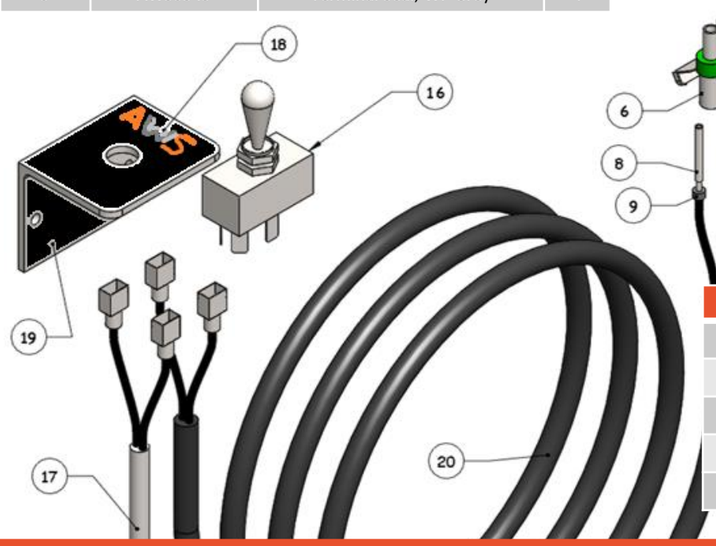

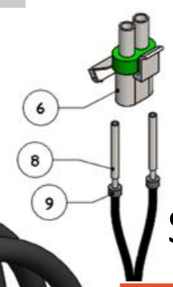

Single Switch Controls

Item #	Part #	Description	Qty
16	AWS0385	Switch, DPDT Crossover	1
17		Power Lead, Specify Application	1
18	AWS0066	Decal, Switch Bracket	1
19	AWS0386	Switch Bracket	1
20	AWS0099	Combine Harness, Single	1

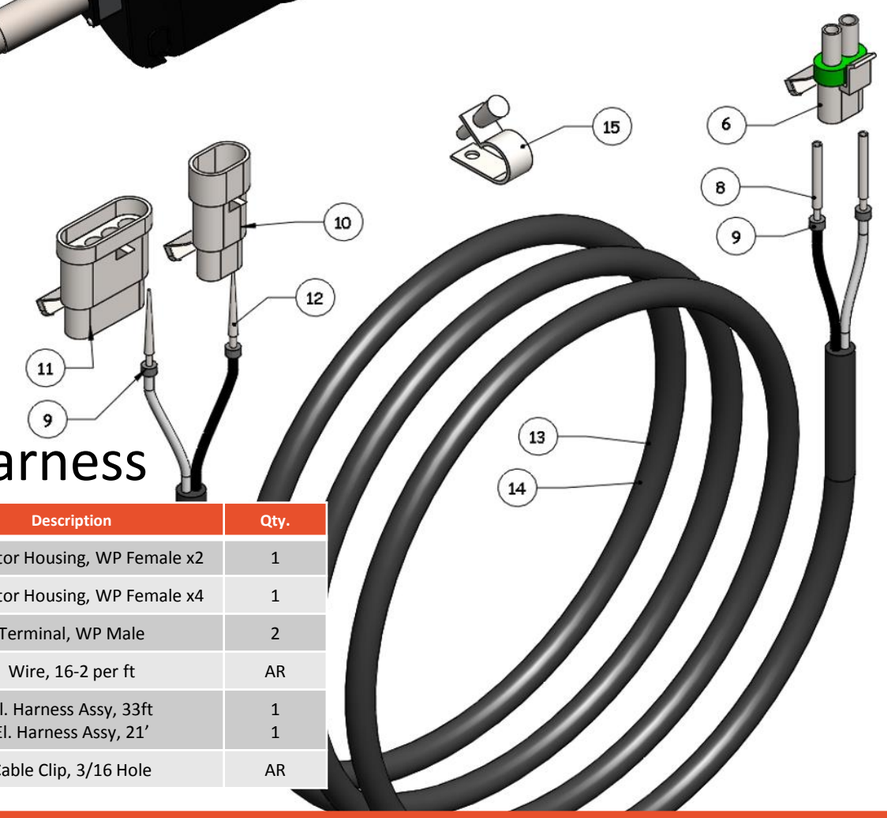

Header Harness

Item #	Part #	Description	Qty.
10	AWS0097	Connector Housing, WP Female x2	1
11	AWS0321	Connector Housing, WP Female x4	1
12	AWS0349	Terminal, WP Male	2
13	AWS0403	Wire, 16-2 per ft	AR
14	AWS0100 AWS0580	El. Harness Assy, 33ft El. Harness Assy, 21’	1 1
15	AWS0263	Cable Clip, 3/16 Hole	AR

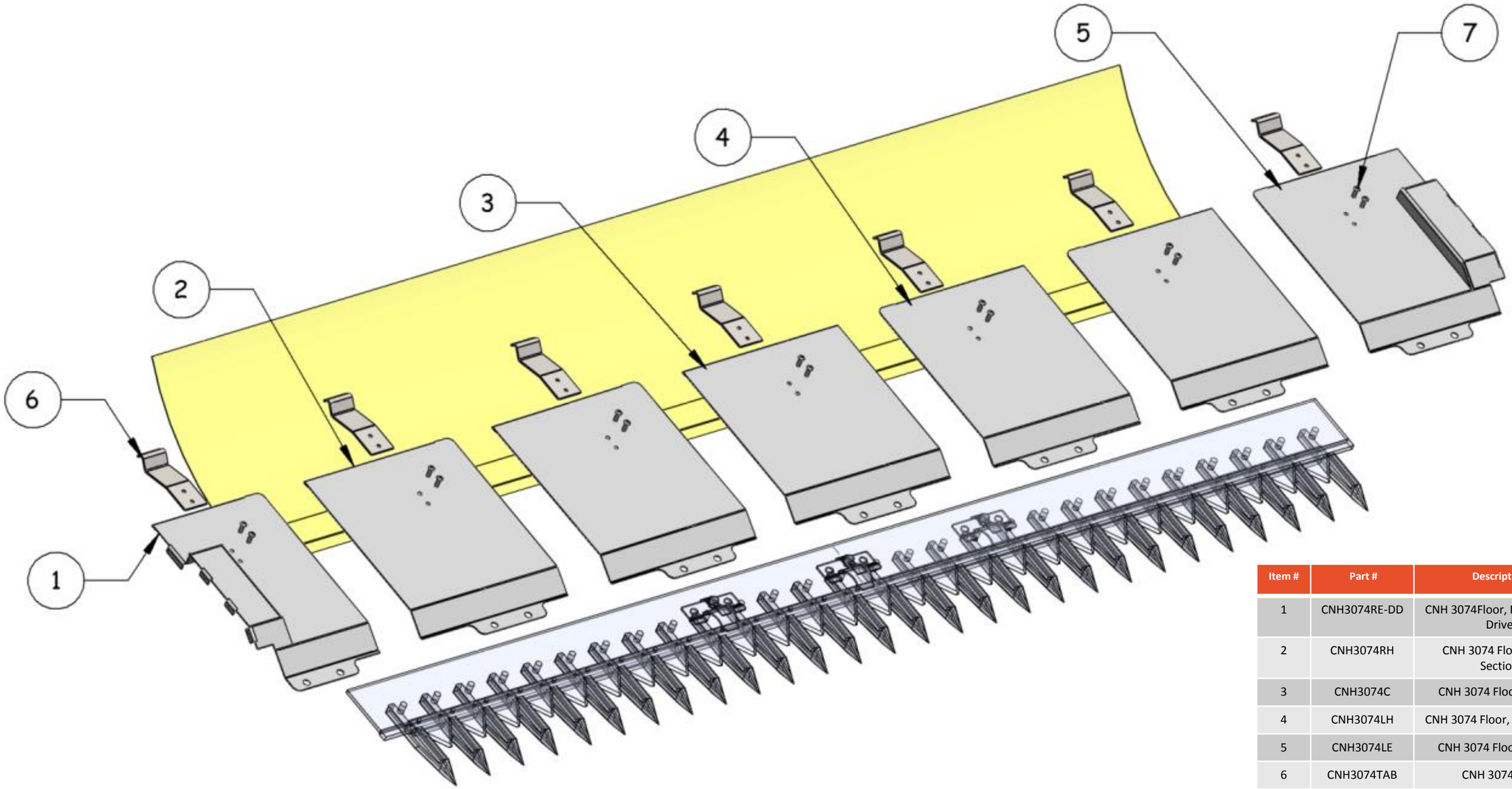

Item #	Part #	Description	Qty.
1	CNH3074RE-DD	CNH 3074Floor, RH End Dual Drive	1
2	CNH3074RH	CNH 3074 Floor, Right Section	AR
3	CNH3074C	CNH 3074 Floor, Center	1
4	CNH3074LH	CNH 3074 Floor, Left Section	AR
5	CNH3074LE	CNH 3074 Floor, LH End	1
6	CNH3074TAB	CNH 3074 TAB	AR
7		Screw, ¼" x ¾"	AR
	CNH3074-20DD CNH3074-25DD CNH3074-30DD CNH3074-35DD	Floor Kit, 20' Dual Drive Floor Kit, 25' Dual Drive Floor Kit, 30' Dual Drive Floor Kit, 35' Dual Drive	